Proceedings of the 5th International Conference on Computing and Data Science
DOI: 10.54254/2755-2721/14/20230773

The advance of non-digital-currency application with blockchain

Yi Lyu[1, 3, †], Tianlong Xing [2, †]

[1]Information Security, Nanjing University of Information Science and Technology, Nanjing, China,210000
[2]Telecommunications Engineering, Xi'an Jiaotong-liverpool University, Suzhou, China, 215028

[3]202083290013@nuist.edu.cn
[†]These authors contributed equally.

Abstract. With the vigorous development of blockchain technology, its decentralization, privacy, convenience, and other characteristics make it shine in the financial field. Today, blockchain technology has gradually been widely integrated into government, the Internet of Things, supply chain management, healthcare, and other areas. It can change the traditional centralized data management model and provide distributed and decentralized data storage and management methods. This method has higher security, transparency, and reliability, which can solve the problems existing in traditional data management methods and improve the efficiency and reliability of data management. In the meantime, using new technologies also brings many practical problems to solve. These include insufficient technology maturity, privacy concerns, and volatile legal and regulatory policies. This paper delves into these real-world scenarios and summarizes some recommendations. This will give a greater understanding of the principles and characteristics of blockchain technology, promote the popularization of blockchain technology, have a more comprehensive understanding of the use of blockchain technology in different fields, and provide valuable research materials for researchers in related fields in the future.

Keywords: blockchain, practical application, safe, problems and solutions.

1. Introduction

Nakamoto first put up the idea of blockchain in 2008. And as the public account book for all transactions, blockchain quickly became an important component of Bitcoin in the following years. With the aid of distributed timestamp servers and point-to-point networks, the blockchain database can be independently administered. The blockchain invented for Bitcoin makes it the first digital currency to solve the problem of repeated consumption. The design of Bitcoin has become a source of inspiration for other applications [1-3].

In 2014, "blockchain 2.0" became a term for decentralized databases [4, 5]. Economists view the second-generation programmable blockchain as a computer language that enables users to create more precise and sophisticated protocols. As a result, after a particular profit has been reached, the profit can be collected through the dividends of successfully executed freight orders or shared certificates. Blockchain 2.0 technology has bypassed the transfer of funds. It acts as a middleman between the

© 2026 The Authors. This is an open access article distributed under the terms of the Creative Commons Attribution License 4.0 (https://creativecommons.org/licenses/by/4.0/).

DOI: 10.54254/2755-2721/14/20230773

exchange of money and information equivalents, assisting people in avoiding the global economy and protecting personal privacy in transactions, thereby ensuring that the interests of owners of intellectual property rights are not violated by others and that people can exchange their information for money on an equal basis. The second-generation blockchain technology allows for storing individuals' "permanent digital ID and image" and provides solutions to the "potential social wealth distribution" inequality.

Digital currency is the earliest and, by far, the most successful blockchain application scenario [6-8]. Among them, Bitcoin, Ethereum, Ripple, Bitcoin Cash, and Letcoin are typical representatives of digital currency and its trading platform. Central banks have recently become interested in digital currency based on blockchain technology. For instance, the Facebook-launched Libra was previously propelled to the fore of the wave, but the big nations now view Libra differently.

A movement of inclusion, sharing, learning, and open-source development is represented by decentralization, Bitcoin, cryptocurrencies, and blockchain innovation. If successfully developed, this movement will only result in the next tightly controlled, opaque, large-scale pyramid grading system. Incredible innovation, unheard-of financial rights, new exchange procedures, and storage value will result. It will cause a lot of disruption. These are remarkable achievements of blockchain technology.

There are many application scenarios of blockchain technology. First, share information. Traditionally, the central platform distributes news or information, so realizing real-time information sharing for some important news is challenging. In addition, it can be challenging to verify the publisher's identity. All nodes need to share information using blockchain technology to ensure data consistency. A safe and reliable information-sharing channel can be established based on the invariance and consensus system. Secondly, asset tokenization. Assets can be divided into tangible assets and intangible assets. It takes work to divide tangible assets such as real estate. Verifying certain intangible assets (such as intellectual property rights) is even more frustrating. If such assets are bound with tokens, we can quickly know how these assets are transferred and divided.

Then, logistics traceability. The traditional logistics industry is facing enormous challenges, such as the counterfeiting of luxury goods and the supply chain management of the food industry. Based on blockchain, each product is equipped with a unique digital ID. Manufacturing, logistics, warehouse, distribution place, and retail can be recorded on the chain. Every part of the product can be traced. There are many application scenarios of blockchain technology, such as copyright protection, fundraising, international payments, etc. In short, blockchain aims to solve the trust crisis, simplify various procedures, and verify digital identity or ownership. We can see many attempts to apply blockchain to governance, audit, the medical industry, etc. Not only that, but blockchain technology can also be applied to other different fields. Blockchain features like anonymity, decentralization, and others can be used in the medical industry to safeguard patient privacy. Potential blockchain application areas include electronic health records (EHR), DNA wallets, and counterfeit medicine prevention.

Problems such as file management, identity (qualification) authentication, and public trust are objective in public service, education, charity, and public welfare. The traditional way is to rely on a credible third party to make credit endorsements, but problems such as fraud and lack of still exist. Blockchain technology can ensure all data's integrity, permanence, and immutability. It can effectively solve these industries' difficulties and pain points in certificate storage, tracking, correlation, backtracking, etc. Blockchain technology can also be used in other areas, such as the Internet of Things or popular culture. As blockchain technology advances, it will be able to improve people's lives in more ways.

This paper reviews the birth and development of blockchain technology and its gradual expansion in application fields. And learn about the changing attitude of the public toward this technology. The practical application of blockchain technology in scenarios such as information sharing, asset tokenization, logistics traceability, medical treatment, and government public services is selected in detail. Several significant benefits and challenges arising from the development of blockchain applications are analyzed.

DOI: 10.54254/2755-2721/14/20230773

2. The Non-digital-currency of blockchain

2.1. Smart Voltage Monitoring

Modern daily electricity use, there will be many problems in the power system. It will cost a lot of materials to find and solve these problems. And real-time voltage detection and information storage also a massive amount of data.

In preparation, the existing system functions in the market are one-sided and expensive. And there are also problems such as information security and storage capacity. Based on these, we desperately need a system to store and analyze voltage data and prevent theft.

As shown in Figure 1. VoltStar is a voltage data storage and detection system consisting of four parts: Voltage Source, Master Unit, Transfer Unit, and IoT Module. Its structure is simple and convenient for storing detection information, but it also needs better security and easy intrusion [9].

VoltChain, a decentralized system, used Blockchain technology and an IPFS system. The use of these two technologies ensures the security of system information storage. VoltChain is a development of peer-to-peer architecture. VoltChain comprises three main components: the processing unit, IoT module, and voltage source. The design of multiple peers increases fault tolerance and security but also requires more complex designs and new technologies that are difficult to implement.

Due to their different structures in the subsequent inspection, data transfers faster in VoltStar than VoltChain. Also, VoltChain enhances privacy and security. Therefore, there is a delicate balance to be struck between data transmission rate and data security.

To sum up, the centralized solution is efficient but more vulnerable. The decentralized solution satisfies the security but needs to consider efficiency. Users can choose different systems to solve problems according to their own needs. However, the security protection of information privacy still needs to be further optimized.

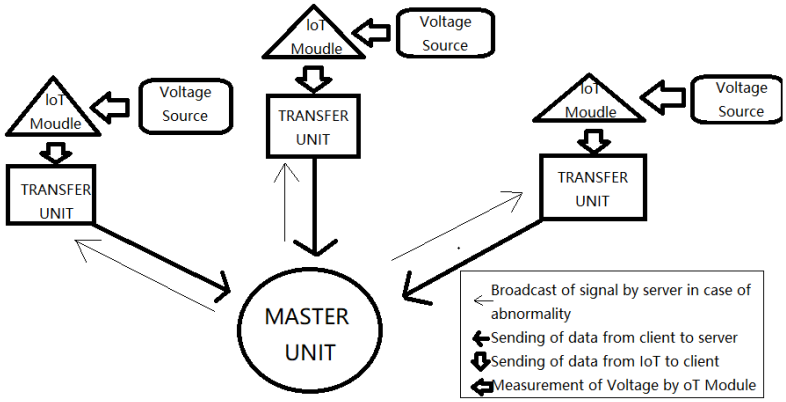

VoltStar: the centralised voltage monitoring system.

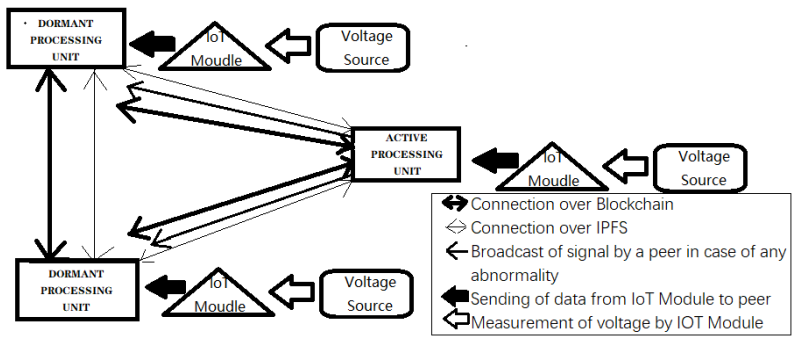

VoltChain: decentralised system network topology.

Figure 1. A flowchart of the two systems.

DOI: 10.54254/2755-2721/14/20230773

2.2. Reliable Traffic Monitoring Mechanisms

In daily life, traffic accidents often occur. However, real-time monitoring of road conditions takes work. Installing cameras without dead corners is a considerable expense, and the lack of people in many remote areas will also save resources. The researcher proposed the idea of building a website to exchange traffic information from cars in motion rather than ubiquitous cameras. However, there are still many uncertainties in this idea. Trust between strangers is a significant problem. Some people will inevitably take this opportunity to provide false information in exchange for compensation [10].

The building system should be based on the Blockchain to deal with these problems. A real-time traffic monitoring system (BRTM) powered by Blockchain offers TA and automobiles a trustworthy and efficient information-sharing mechanism, as shown in Figure 2. This also records the past credit scores of participants. A true budgeted selection and pricing (TB SAP) algorithm is created to encourage the spread of communications. Users can obtain the required traffic information by selling rewards, bidding, etc. And set up a unique reverse auction mechanism to increase the proportion of authenticity. This can also promote conscience competition rather than malicious bidding.

The performance of the reputation-based DPoS mechanism and the accuracy and viability of the reverse auction process are what matter most in the numerical simulation. Explore the correctness and feasibility of prediction by comparing different data nodes. After reaching the changes of various groups of complex mathematical data, it is concluded that reverse bidding is feasible.

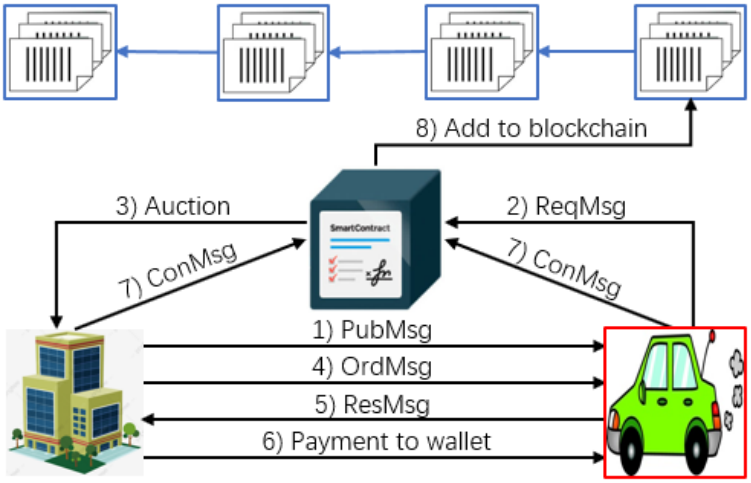

Figure 2. The traffic information trading framework between TA and vehicles.

3. Discussion

Although blockchain technology is a hot research topic in today's computer field, it also faces many problems: 1) Security: While blockchain technology is secure, there has been hacking and fraud in blockchain-based systems. For example, there have been cases of exchanges being hacked and funds being stolen. 2) Adoption: Blockchain technology's lack of widespread adoption is another issue. While it has gained some traction in certain industries, it has yet to be fully embraced by the mainstream. This can make it difficult for companies seeking blockchain solutions to find customers and partners. 3) Regulation: The use of blockchain technology still needs to be fully regulated, which can create uncertainty for businesses and individuals looking to use it. There is also the issue of different countries having different regulations surrounding blockchain, which can create difficulties for companies looking to operate globally. 4) Scalability: One of blockchain technology's main issues is the need for more scalability. Most blockchain networks today have a cap on the number of transactions they can handle in a given amount of time, which can result in delays and expensive transaction fees. 5) Complexity: The technology behind blockchain can be complex, making it difficult for non-professionals to understand and use. It can be a barrier to adoption, as people may hesitate to use a technology they need help understanding.

DOI: 10.54254/2755-2721/14/20230773

This paper chooses three aspects, security, adoption, and regulation, to elaborate on:

Blockchains use cryptography to secure the data they store and transmit. Cryptography is the practice of secure communication, which involves using codes and ciphers to protect information from unauthorized access. Each data block in a blockchain is protected using cryptographic methods, such as hashing and digital signatures. Data is transformed via hashing into a fixed-length character string called a hash. A hash function is a mathematical algorithm that takes in data and produces a hash. A blockchain's blocks each have there and the block's hash before it. They are using the hashes of the blocks before them, making a chain of blocks all secured by one another. An additional crucial component of blockchain security is digital signatures. A digital signature is a way of verifying the authenticity of a message or document. It uses cryptographic techniques to ensure the message or document is not altered. In a blockchain, a digital signature plays a crucial role in determining the authenticity of transactions. Overall, the security and integrity of data on blockchain rely heavily on encryption technologies such as hashing and digital signatures.

The security of blockchain technology has been challenged in various ways. Here are some examples: 1) Hacking: Blockchain networks can be vulnerable to hacking attacks, which can steal cryptocurrency or other sensitive data. For example, in 2019, hackers stole over $40 million of Bitcoin from the cryptocurrency exchange Binance. 2) 51% attacks: In a 51% attack, a gang of bad actors seizes control of more than 50% of the computational power on a blockchain network. This allows them to rewrite the blockchain & apos transaction history and potentially double-spend cryptocurrency. 3) Phishing attacks: In a phishing attack, a hacker poses as a legitimate entity to obtain sensitive information, such as login credentials or private keys. These attacks can be targeted at individuals or organizations using blockchain technology. 4)Malware: Malware, or malicious software, can be used to attack blockchain networks and steal sensitive data.

However, despite these challenges, it is essential to note that blockchain technology can still offer increased security compared to traditional systems. Several factors have contributed to mainstream industries' slow adoption of blockchain technology: 1) Complexity: Many people find blockchain technology and cryptocurrency complex and difficult to understand, making it challenging to convince people to use them. 2) Regulatory uncertainty: The need for precise regulation around blockchain technology and cryptocurrency has made some people hesitant to use it. They are still determining how governments and financial institutions will treat it. This point has been mentioned above. 3) Scalability: Some blockchain networks, such as the Bitcoin network, need help with scalability, which refers to the ability to process a high volume of transactions quickly. This can make them less attractive for mainstream use. 4) Integration with existing systems: Companies need help integrating blockchain technology with their existing systems and processes, which can make it difficult to justify the costs of implementing it.

In general, while blockchain technology has great potential to revolutionize several industries, several challenges still need to be overcome for it to be widely adopted. There have been instances where blockchain technology has raised legal and regulatory issues: 1) A smart contract is an automatically executed contract between a buyer and a seller that writes the relevant terms of the agreement directly into the lines of code. While they have the potential to streamline legal agreements and automate contract execution, they also raise several legal issues. Here are a few examples. Contract formation: In traditional contract law, the construction of a contract typically requires an offer, acceptance, and consideration. How these concepts apply to smart contracts, often formed through automated software, is still being determined. Enforceability: It is uncertain whether or how smart contracts will be enforced in the event of a dispute. It needs to be made clear how a buyer would take legal action if, for instance, a smart contract is set up to pay funds to a seller upon receipt of items automatically. However, the products still need to be delivered as promised. Interpretation: There may be issues around the interpretation of smart contracts, particularly if they are written in code rather than natural language. For example, it may be challenging to determine the parties & apos; intentions or the meaning of specific terms. Governing law: It may need to be clarified which jurisdiction's laws apply to a smart contract, particularly if it is used internationally. While smart contracts have the potential to revolutionize legal

DOI: 10.54254/2755-2721/14/20230773

agreements, they also raise several legal issues that will need to be addressed for them to be widely adopted. 2) Jurisdiction: One challenge is determining which jurisdiction should regulate activities related to blockchain technology. For example, if a blockchain network spans multiple countries, it may need to be clarified which country's laws should apply. 3) Money transmission: In many countries, money transmission is regulated by law. Cryptocurrency, often based on blockchain technology, may raise questions about whether these laws apply. 4) Data privacy: Data is saved on numerous computers rather than in a single location because many blockchain networks are decentralized. This raises questions about protecting personal data and complying with data privacy laws. 5) Smart contracts have the potential to change legal contracts since they are self-executing contracts in which the contents of the agreement between the buyer and seller are directly encoded into lines of code. However, there are questions about whether traditional legal concepts, such as contract formation and enforceability, apply to smart contracts.

While using blockchain technology may raise legal and regulatory issues, it is essential to note that these issues are not unique to blockchain and can also arise in other technology areas. To sum up, there is still much room for improvement in the research and application of blockchain technology. People need to test further and improve, whether from the level of public awareness or supporting legal measures.

4. Conclusion

This paper summarizes and reviews the technical iterations that blockchain technology has undergone since its invention. The application of blockchain today is analyzed, and the great convenience brought by implementing technology and the problems existing in the specific environment are explained. The two practical blockchain application technologies of Smart Voltage Monitoring and Reliable Traffic Monitoring Mechanisms Based on Blockchain in Vehicular Networks are discussed in detail after reviewing the pertinent research on the application field of blockchain, and the blockchain application examples in the frontier field are understood in more factual content. The benefits and drawbacks of blockchain technology at the application level are outlined in the review above, along with theory and practical application experience. A more in-depth discussion is carried out on three aspects of security, adoption, and regulation. This article's review of blockchain technology and applications in various fields can promote the popularization of blockchain technology, guide future blockchain applications, and provide researchers with rich research materials to help them better research and explore blockchain technology.

References

[1] Zheng, Z., Xie, S., Dai, H. N., Chen, X., & Wang, H. (2018). Blockchain challenges and opportunities: A survey. International journal of web and grid services, 14(4), 352-375.

[2] Monrat, A. A., Schelén, O., & Andersson, K. (2019). A survey of blockchain from the perspectives of applications, challenges, and opportunities. IEEE Access, 7, 117134-117151.

[3] Nofer, M., Gomber, P., Hinz, O., & Schiereck, D. (2017). Blockchain. Business & Information Systems Engineering, 59, 183-187.

[4] Ulieru, M. (2016). Blockchain 2.0 and beyond: adhocracies. Banking Beyond Banks and Money: A Guide to Banking Services in the Twenty-First Century, 297-303.

[5] Aggarwal, S., & Kumar, N. (2021). Blockchain 2.0: smart contracts. In Advances in Computers (Vol. 121, pp. 301-322). Elsevier.

[6] Alzubaidi, I. B., & Abdullah, A. (2017). Developing a digital currency from an Islamic perspective: case of blockchain technology. International Business Research, 10(11), 79-87.

[7] Truby, J. (2018). Decarbonizing Bitcoin: Law and policy choices for reducing the energy consumption of Blockchain technologies and digital currencies. Energy research & social science, 44, 399-410.

DOI: 10.54254/2755-2721/14/20230773

[8] Zheng, Z., Xie, S., Dai, H. N., Chen, W., Chen, X., Weng, J., & Imran, M. (2020). An overview on smart contracts: Challenges, advances and platforms. Future Generation Computer Systems, 105, 475-491.

[9] Mishra, S., & Kumar, S. (2021, January). Smart Voltage Monitoring: Centralised and Blockchain-based Decentralised Approach. In 2020 IEEE International Conference on Internet of Things and Intelligence System (IoTaIS) (pp. 49-55). IEEE.

[10] Guo, J., Ding, X., & Wu, W. (2021). Reliable traffic monitoring mechanisms based on blockchain in vehicular networks. IEEE Transactions on Reliability, 71(3), 1219-1229.