Proceedings of the 5th International Conference on Computing and Data Science
DOI: 10.54254/2755-2721/14/20230752

Compartmental SICR model applied on study of celebrity worship behaviour

Shuchang Xing[1,4], Muchen Liu[2] and Kehan Huang[3]

[1]Tengzhou No.1 High School, 277599, Tengzhou, China
[2]Shanghai Southwest Weiyu Middle School, 200030, Shanghai, China
[3]Chongqing No.1 Middle School 400030, Chongqing, China

[4]1772067089@qq.com

Abstract. We notice that there are lots of researches that studies celebrity worship behaviour and celebrity endorsement. Nevertheless, few go deep into a mathematical perspective, much less try to quantify this ambiguous process due to the lack of suitable models. In this research, we pioneer a new way, using SICR epidemic model, to fully describe the process of celebrity worship in details, through which we make predictions based on the basic reproduction number whether a celebrity could expand his or her fan base continuously. Meanwhile, not only do we further diversify the function of SICR model, but we also make improvements on the model itself. At the end of research, we also provide useful suggestions for celebrities and their brokerage companies about how to keep the number of their fans increasing rather than hit a bottleneck so quickly. The fact is that celebrities should emphasize the avoidance of negative events instead of positive publicity and be attractive to more groups of people rather than stick to one specific group only.

Keywords: celebrity worship, SICR model, sensitivity analysis, fan base, fanatic.

1. Introduction

Celebrity endorsement nowadays play an important role in attracting the public to buy relevant products [1, 2], because consumers usually feel more sympathetic toward a brand if its products are endorsed by their favourites or who they empathize with. Consequently, they may subconsciously try to emulate the celebrities' traits by using a specific product [3, 4]. The effectiveness depends, to a large extent, on the volume of their fan base [5, 6]. Moreover, celebrity endorsement could be even the salient executive strategy in some specific countries (e.g China),where national celebrities often endorse more than 20 brands.[7] Therefore, it is meaningful to find a suitable model to simulate the change of the amount of fans that a celebrity has. This is because the model itself could help the relevant companies determine the potential value of a certain celebrity in order to profit from their endorsement more properly.

SIR Model used to be applied to predict whether an infectious disease could be controlled, based on the reproduction number R_0 [8-13]. As for a typical SIR model, the whole model is usually composed of three groups of people, named the susceptible, the infected and the recovered. Their relation is described by a series of ordinary differential equations as follows:

© 2026 The Authors. This is an open access article distributed under the terms of the Creative Commons Attribution License 4.0 (https://creativecommons.org/licenses/by/4.0/).

DOI: 10.54254/2755-2721/14/20230752

$$\begin{aligned} \frac{ds}{dt} &= -\frac{\beta IS}{N} \\ \frac{dI}{dt} &= \frac{\beta IS}{N} - \gamma I \\ \frac{dR}{dt} &= \gamma I \end{aligned}$$

Where $\beta, \gamma > 0$, $R_0 = \frac{\beta}{\gamma}$

Moreover, the living population is usually regarded as a very large constant compared with the number of people involved in the SIR system. As a result, the impact of births and deaths on the system is negligible [14].

There are also many variants of SIR model, including SI, SICR, SEIR, SIRD, each of which is utilized in different circumstances to better characterize the object, such as [15-18].

Meanwhile, in numerous SIR models and its variants, it is found that the infection rate are different in different groups, thus the technique of multi-grouping has been studied and used in various models [19-21].

Though SIR model is mostly utilized for the study on infectious diseases, it is believed that many other things including celebrity worship have such infectious property. Considering the similarity between them, we decide to apply this model to study this behaviour from an unprecedented perspective, treating the behaviour of the celebrity worship as an infectious disease. The model is feasible and convincing based on two assumptions:

(A_1) the susceptible people are subject to the bandwagon effect strictly, i.e. they must go through a stage that a certain celebrity is introduced to them before they become a fan, or otherwise they come to a halt at a favorable impression only. And the process is accumulative.

(A_2) all of behaviours of the infected people (including the fanatic) are spontaneous, i.e. fans are irrational, not affected by any external factor.

(A_1) is the fundamental assumption that ensures the validity and suitableness of SIR model applied on the study of celebrity worship behaviour. By (A_2), we could merely use a scale factor to describe the behaviour of the infected people in order to preserve the basic property of the SIR model.

Among all of the variants of epidemic models, the susceptible-infected-crazy-recovered (SICR) model would be the most satisfying due to the stage of being crazy, which reveals the fundamental property of celebrity worship. By contrast, new fans are considered as more rational compared with the die-hard, consequently they are more inclined to unfollow their current idols on account of the occurrence of negative states that reduces people's attention on the celebrity (e.g. low quality of work, unsuccessful publicity). Thus, it is necessary to mention that the traditional SICR model doesn't see S to I as reversible [11] [22]. Nevertheless, as we will see, in this model, attempt has been made to remedy this detail to better adjust to this specific scenario. Meanwhile, it should be clarified that it in this context, being recovered means no longer following the idol with zero probability of re-following, or simply becoming an anti-fan. And everyone in the system could possibly be recovered because of some irreparable negative affairs of celebrity (e.g. extramarital affairs, committing a crime, racist language).

The paper is organized as follows:

In Chapter 2, we will have a deeper discussion about how the compartmental model was constructed and under what conditions.

In Chapter 3, the basic reproduction number will also be calculated;

In Chapter 4, we will analyze the result further and do sensitivity analysis to test the validity and practicability of the model.

In Chapter 5, it will be concluded how to increase the number of fans what differentiate phenomenon idols from those less famous ones.

DOI: 10.54254/2755-2721/14/20230752

2. The model

As stated above, an embryonic form of modified SICR model has been created. The susceptible people come from the whole population, who have been impressed by the positive behaviour (e.g popular works, interaction with the public). Then everyone is a potential fan if susceptible, and will become a substantive one after being infected by existing fans. Afterwards, in a long-term view, either they become fanatic or recovered. For those crazy fans, nonetheless, the only way out is to be recovered, though usually with fairly low rate γ.

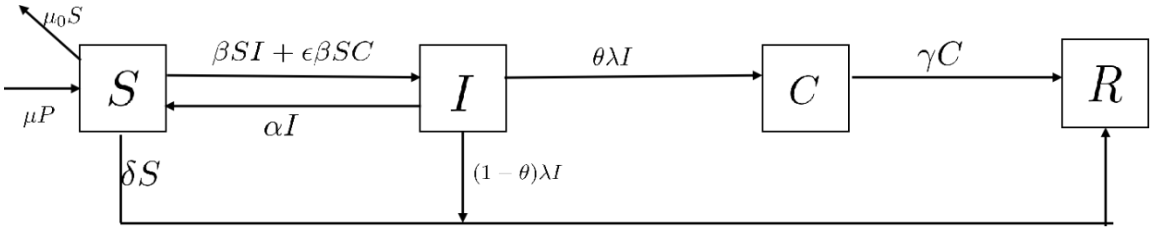

Figure 1. Simplified flowchart of celebrity worship for the ODE model.

Table 1. Parameter description.

Parameter	Interpretation	
β	The transmission probability between **S** and **I** per contact	
ϵ	The multiplier by which the transition probability of **C** is greater than that of **I**	$\epsilon > 1$
α	The average probability of the temporary negative state making rational fans unfollow the idol.	
γ	The average rate of the fanatics unfollowing the idol	
μ	The probability that a person becomes susceptible	
P	The whole population very large constant	very large constant
$\theta\mu$	The average progress rate of rational fans becoming crazy	
$(1-\theta)\lambda$	The average rate of rational fans unfollowing their idol	
μ_0	The average probability of susceptible people losing their favourable opinions over the idol	

Although the simple model makes sense indeed, it is not practical enough for several reasons. First of all, the vulnerability to a certain idol of people of different age is different because of the generation gap and empathy gap, which causes different understandings of the celebrity. The celebrity selection has a correlation with the age groups [3]. In particular, people of similar age share more interests in a certain idol, hence the transmission probability between them is higher. Furthermore, the spending power of them is also different, which is an important factor for companies to be concerned about. Thus it is apparently unreasonable to consider the population as a whole, so using multiple grouping will make the result more realistic. The whole population will be divided into 3 age groups 12-32, 32-52, 52-72, and we suppose there are several more assumptions that need to be stated.

(A_3) The children under 12 do hot have celebrity worship behaviour, even if so, the spending power of them is negligible.

(A_4) The resistance to the celebrity of people from all age groups is the same, i.e. as a whole, there's no significant age difference in attitudes towards to a negative affair of a celebrity.

By (A_3) there is no statistical significance for taking children under 12 into consideration. Moreover,(A_4) allows us to use the same parameter to describe the process of people unfollowing the celebrity in different age groups.

DOI: 10.54254/2755-2721/14/20230752

Therefore, we need to add up or redefine a few more parameters as following table shows, and the remaining parameters stay unchanged.

Table 2. Parameter description.

Parameter	Interpretation	Annotation
P_i	The whole population in the age group i	very large constant
$\beta_{i,j}$	The transmission probability between S_i and I_j per contact	$\beta_{ii} > \beta_{ij}, i \neq j$
ϵ	The multiplier by which the transition probability of C_j is greater than that of I_j	$\epsilon > 1$
ϕ	The growth rate of the population	$\emptyset = \frac{1}{20}$
$\theta_i\lambda_i$	The average progress rate of rational fans in the age group i becoming crazy	
$(1-\theta_I)\lambda_I$	The average rate of rational fans in the age group i unfollowing their idol	

It is clear that susceptible people could be infected by (crazy) fans in different age groups by different β's. And the process that S_i is infected is generally formulated as $S_i \sum_{i=1}^{n} (\beta_{ij} I_j + \epsilon \beta_{ij} C_j)$. As we divide the whole population into three equally, so the growth rate ϕ is the same for each age group, named $\frac{1}{20}$, for there is a gap of 20 years in each group.

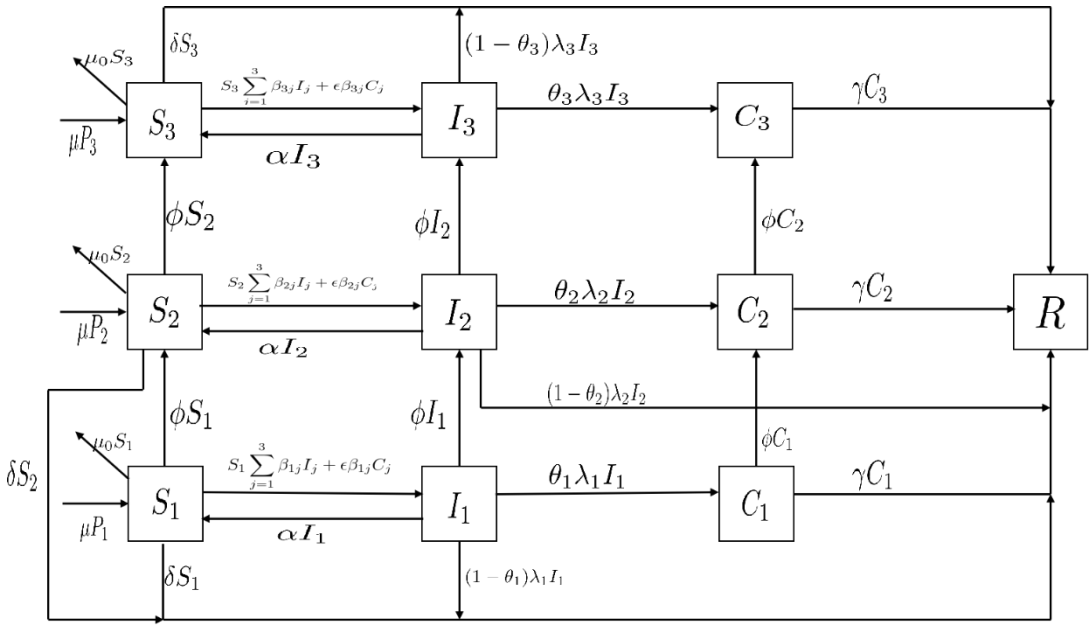

Figure 3. Flowchart of the refined compartmental model.

According to the discussion above and the flowchart presented, the model is formulated as follows:

$$\frac{dI_1}{dt} = S_1 \sum_{j=1}^{3} (\beta_{1j} I_j + \epsilon \beta_{1j} C_j) - (\alpha + \phi + \lambda_1) I_1$$

$$\frac{dC_1}{dt} = \theta_1 \lambda_1 I_1 - (\phi + \gamma) C_1$$

DOI: 10.54254/2755-2721/14/20230752

$$\frac{dI_2}{dt} = S_2 \sum_{j=1}^{3} (\beta_{2j} I_j + \epsilon \beta_{2j} C_j) + \phi I_1 - (\alpha + \phi + \lambda_2) I_2$$

$$\frac{dC_2}{dt} = \theta_2 \lambda_2 I_2 + \phi C_1 - (\phi + \gamma) C_2$$

$$\frac{dI_3}{dt} = S_3 \sum_{j=1}^{3} (\beta_{3j} I_j + \epsilon \beta_{3j} C_j) + \phi I_2 - (\alpha + \lambda_3) I_3$$

$$\frac{dC_3}{dt} = \theta_3 \lambda_3 I_3 + \phi C_2 - \gamma C_3$$

$$\frac{dS_1}{dt} = \mu P_1 + \alpha I_1 - S_1 \sum_{j=1}^{3} (\beta_{1j} I_j + \epsilon \beta_{1j} C_j) - (\mu_0 + \delta + \phi) S_1$$

$$\frac{dS_2}{dt} = \mu P_2 + \alpha I_2 + \phi S_1 - S_2 \sum_{j=1}^{3} (\beta_{2j} I_j + \epsilon \beta_{2j} C_j) - (\mu_0 + \delta + \phi) S_2$$

$$\frac{dS_3}{dt} = \mu P_3 + \alpha I_3 + \phi S_2 - S_3 \sum_{j=1}^{3} (\beta_{3j} I_j + \epsilon \beta_{3j} C_j) - (\mu_0 + \delta) S_3$$

$$\frac{dR}{dt} = \delta \sum_{i=1}^{3} S_i + \sum_{i=1}^{3} (1 - \theta_i) \lambda_i I_i + \gamma \sum_{i=1}^{3} C_i$$

3. The basic reproduction number

The disease-free equilibrium is $E_0 = (0,0,S_1,,0,0,S_2,0,0,S_3,R)$

Where

$$S_1 = \frac{\mu P_1}{\mu_0 + \delta + \phi}$$

$$S_2 = \frac{\mu P_2 + \phi \mu P_1}{\mu_0 + \delta + \phi}$$

$$S_3 = \frac{(\mu_0 + \delta + \phi)\mu P_3 + \phi(\mu P_2 + \phi \mu P_1)}{(\mu_0 + \delta + \phi)(\mu_0 + \delta)}$$

$$R = \frac{\mu P_1(\mu_0 + \delta) + (\mu P_2 + \phi \mu P_1)(\mu_0 + \delta) + (\mu_0 + \delta + \phi)\mu P_3 + \phi(\mu P_2 + \phi \mu P_1)}{(\mu_0 + \delta + \phi)(\mu_0 + \delta)}$$

Let

$$F = \begin{pmatrix} S_1 \sum_{j=1}^{3} (\beta_{1j} I_j + \epsilon \beta_{1j} C_j) \\ 0 \\ S_2 \sum_{j=1}^{3} (\beta_{2j} I_j + \epsilon \beta_{2j} C_j) \\ 0 \\ S_3 \sum_{j=1}^{3} (\beta_{3j} I_j + \epsilon \beta_{3j} C_j) \\ 0 \\ 0 \\ 0 \\ 0 \\ 0 \end{pmatrix}$$

DOI: 10.54254/2755-2721/14/20230752

$$V = \begin{pmatrix} (\lambda_1 + \phi + \alpha)I_1 \\ -\theta_1\lambda_1 I_1 + (\phi + \gamma)C_1 \\ -\phi I_1 + (\lambda_2 + \phi + \alpha)I_2 \\ -\theta_2\lambda_2 I_2 - \phi C_1 + (\phi + \gamma)C_2 \\ (\alpha + \lambda_3)I_3 \\ -\theta_3\lambda_3 I_3 - \phi C_2 + \gamma C_3 \\ -\mu P_1 - \alpha I_1 + S_1\sum_{j=1}^{3}(\beta_{1j}I_j + \epsilon\beta_{1j}C_j) + (\mu_0 + \delta + \phi)S_1 \\ -\mu P_2 - \alpha I_2 - \phi S_1 + S_2\sum_{j=1}^{3}(\beta_{2j}I_j + \epsilon\beta_{2j}C_j) + (\mu_0 + \delta + \phi)S_2 \\ -\mu P_3 - \alpha I_3 - \phi S_2 + S_3\sum_{j=1}^{3}(\beta_{3j}I_j + \epsilon\beta_{3j}C_j) + (\mu_0 + \delta)S_3 \\ -\delta\sum_{j=1}^{3}S_i - \sum_{j=1}^{3}(1-\theta_i)\lambda_i I_i - \lambda\sum_{j=1}^{3}C_i \end{pmatrix}$$

$$F = \begin{pmatrix} \beta_{11}S_1 & \epsilon\beta_{11}S_1 & \beta_{12}S_1 & \epsilon\beta_{12}S_1 & \beta_{13}S_1 & \epsilon\beta_{13}S_1 \\ 0 & 0 & 0 & 0 & 0 & 0 \\ \beta_{21}S_2 & \epsilon\beta_{21}S_2 & \beta_{22}S_2 & \epsilon\beta_{22}S_2 & \beta_{23}S_2 & \epsilon\beta_{23}S_2 \\ 0 & 0 & 0 & 0 & 0 & 0 \\ \beta_{31}S_3 & \epsilon\beta_{31}S_3 & \beta_{32}S_3 & \epsilon\beta_{32}S_3 & \beta_{33}S_3 & \epsilon\beta_{33}S_3 \\ 0 & 0 & 0 & 0 & 0 & 0 \end{pmatrix}$$

$$V = \begin{pmatrix} \lambda_1 + \phi + \alpha & 0 & 0 & 0 & 0 & 0 \\ -\theta_1\lambda_1 & \phi + \gamma & 0 & 0 & 0 & 0 \\ -\phi & 0 & \lambda_2 + \phi + \alpha & 0 & 0 & 0 \\ 0 & -\phi & -\theta_2\lambda_2 & \phi + \gamma & 0 & 0 \\ 0 & 0 & 0 & -\phi & -\theta_3\lambda_3 & \gamma \end{pmatrix}$$

$$v^{-1} = \begin{pmatrix} \frac{1}{\alpha+\lambda_1+\phi} & 0 & 0 & 0 & 0 & 0 \\ \frac{\theta_1\lambda_1}{(\gamma+\phi)(\alpha+\lambda_1+\phi)} & \frac{1}{\gamma+\phi} & 0 & 0 & 0 & 0 \\ \frac{\gamma^2\phi+2\gamma\phi^2+\phi^3}{(\gamma+\phi)^2(\alpha+\lambda_1+\phi)(\alpha+\lambda_2+\phi)} & 0 & \frac{1}{\alpha+\lambda_2+\phi} & 0 & 0 & 0 \\ -\frac{-\theta_1\lambda_1\phi(\alpha+\lambda_2+\phi)-\left(\theta_2\lambda_2\left(\gamma\phi+\phi^2\right)\right)}{(\gamma+\phi)^2(\alpha+\lambda_1+\phi)(\alpha+\lambda_2+\phi)} & \frac{\phi}{(\gamma+\phi)^2} & \frac{\theta_2\lambda_2}{(\gamma+\phi)(\alpha+\lambda_2+\phi)} & \frac{1}{\gamma+\phi} & 0 & 0 \\ \frac{\gamma^3\phi^2+2\gamma^2\phi^3+\gamma\phi^4}{\gamma(\alpha+\lambda_3)(\gamma+\phi)^2(\alpha+\lambda_1+\phi)(\alpha+\lambda_2+\phi)} & 0 & \frac{\phi}{(\alpha+\lambda_3)(\alpha+\lambda_2+\phi)} & 0 & \frac{1}{\alpha+\lambda_3} & 0 \\ \frac{\theta_3\lambda_3\left(\gamma^2\phi^2+2\gamma\phi^3+\phi^4\right)-\phi(\alpha+\lambda_3)\left(-\theta_1\lambda_1\phi(\alpha+\lambda_2+\phi)-\left(\theta_2\lambda_2\left(\gamma\phi+\phi^2\right)\right)\right)}{\gamma(\alpha+\lambda_3)(\gamma+\phi)^2(\alpha+\lambda_1+\phi)(\alpha+\lambda_2+\phi)} & \frac{\phi^2}{\gamma(\gamma+\phi)^2} & -\frac{-\alpha\theta_2\lambda_2\phi-\gamma\theta_3\lambda_3\phi-\theta_3\lambda_3\phi^2-\theta_2\lambda_2\lambda_3\phi}{\gamma(\alpha+\lambda_3)(\gamma+\phi)(\alpha+\lambda_2+\phi)} & \frac{\phi}{\gamma(\gamma+\phi)} & \frac{\theta_3\lambda_3}{\gamma(\alpha+\lambda_3)} & \frac{1}{\gamma} \end{pmatrix}$$

$$FV^{-1} = \begin{pmatrix} a_{11} & a_{12} & a_{13} & a_{14} & a_{15} & a_{16} \\ 0 & 0 & 0 & 0 & 0 & 0 \\ a_{31} & a_{32} & a_{33} & a_{34} & a_{35} & a_{36} \\ 0 & 0 & 0 & 0 & 0 & 0 \\ a_{51} & a_{52} & a_{53} & a_{54} & a_{55} & a_{56} \\ 0 & 0 & 0 & 0 & 0 & 0 \end{pmatrix}$$

Where

$$a_{11} = \frac{\beta_{12}S_1(\gamma^2\phi + 2\gamma\phi^2 + \phi^3)}{(\gamma+\phi)^2(\alpha+\lambda_1+\phi)(\alpha+\lambda_2+\phi)} + \frac{\beta_{13}S_1(\gamma^3\phi^2 + 2\gamma^2\phi^3 + \gamma\phi^4)}{\gamma(\alpha+\lambda_3)(\gamma+\phi)^2(\alpha+\lambda_1+\phi)(\alpha+\lambda_2+\phi)} + \frac{\beta_{11}S_1}{\alpha+\lambda_1+\phi}$$
$$+ \frac{S_1\epsilon\beta_{13}\left(\theta_3\lambda_3(\gamma^2\phi^2 + 2\gamma\phi^3 + \phi^4) - \phi(\alpha+\lambda_3)\left(-\theta_1\lambda_1\phi(\alpha+\lambda_2+\phi) - \left(\theta_2\lambda_2(\gamma\phi+\phi^2)\right)\right)\right)}{\gamma(\alpha+\lambda_3)(\gamma+\phi)^2(\alpha+\lambda_1+\phi)(\alpha+\lambda_2+\phi)}$$
$$- \frac{\varepsilon\beta_{12}S_1\left(-\theta_1\lambda_1\phi(\alpha+\lambda_2+\phi) - \left(\theta_2\lambda_2(\gamma\phi+\phi^2)\right)\right)}{(\gamma+\phi)^2(\alpha+\lambda_1+\phi)(\alpha+\lambda_2+\phi)} + \frac{\varepsilon\beta_{11}\theta_1\lambda_1 S_1}{(\gamma+\phi)(\alpha+\lambda_1+\phi)}$$

DOI: 10.54254/2755-2721/14/20230752

$$a_{12} = \frac{\varepsilon\beta_{12}S_1\phi}{(\gamma+\phi)^2} + \frac{\varepsilon\beta_{11}S_1}{\gamma+\phi} + \frac{S_1\epsilon\beta_{13}\phi^2}{\gamma(\gamma+\phi)^2}$$

$$a_{13} = \frac{\beta_{12}S_1}{\alpha+\lambda_2+\phi} + \frac{\beta_{13}S_1\phi}{(\alpha+\lambda_3)(\alpha+\lambda_2+\phi)} + \frac{\varepsilon\beta_{12}\theta_2\lambda_2S_1}{(\gamma+\phi)(\alpha+\lambda_2+\phi)} - \frac{S_1\epsilon\beta_{13}(-\alpha\theta_2\lambda_2\phi - \gamma\theta_3\lambda_3\phi - \theta_3\lambda_3\phi^2 - \theta_2\lambda_2\lambda_3\phi)}{\gamma(\alpha+\lambda_3)(\gamma+\phi)(\alpha+\lambda_2+\phi)}$$

$$a_{14} = \frac{\varepsilon\beta_{12}S_1}{\gamma+\phi} + \frac{S_1\epsilon\beta_{13}\phi}{\gamma(\gamma+\phi)}$$

$$a_{15} = \frac{\beta_{13}S_1}{\alpha+\lambda_3} + \frac{\theta_3\lambda_3S_1\epsilon\beta_{13}}{\gamma(\alpha+\lambda_3)}$$

$$a_{16} = \frac{S_1\epsilon\beta_{13}}{\gamma}$$

$$a_{31} = \frac{\beta_{22}S_2(\gamma^2\phi + 2\gamma\phi^2 + \phi^3)}{(\gamma+\phi)^2(\alpha+\lambda_1+\phi)(\alpha+\lambda_2+\phi)} + \frac{\beta_{23}S_2(\gamma^3\phi^2 + 2\gamma^2\phi^3 + \gamma\phi^4)}{\gamma(\alpha+\lambda_3)(\gamma+\phi)^2(\alpha+\lambda_1+\phi)(\alpha+\lambda_2+\phi)} + \frac{\beta_{21}S_2}{\alpha+\lambda_1+\phi} + \frac{S_2\epsilon\beta_{23}\left(\theta_3\lambda_3(\gamma^2\phi^2 + 2\gamma\phi^3 + \phi^4) - \phi(\alpha+\lambda_3)\left(-\theta_1\lambda_1\phi(\alpha+\lambda_2+\phi) - \left(\theta_2\lambda_2(\gamma\phi+\phi^2)\right)\right)\right)}{\gamma(\alpha+\lambda_3)(\gamma+\phi)^2(\alpha+\lambda_1+\phi)(\alpha+\lambda_2+\phi)} - \frac{\varepsilon\beta_{22}S_2\left(-\theta_1\lambda_1\phi(\alpha+\lambda_2+\phi) - \left(\theta_2\lambda_2(\gamma\phi+\phi^2)\right)\right)}{(\gamma+\phi)^2(\alpha+\lambda_1+\phi)(\alpha+\lambda_2+\phi)} + \frac{\varepsilon\beta_{21}\theta_1\lambda_1S_2}{(\gamma+\phi)(\alpha+\lambda_1+\phi)}$$

$$a_{32} = \frac{\varepsilon\beta_{22}S_2\phi}{(\gamma+\phi)^2} + \frac{\varepsilon\beta_{21}S_2}{\gamma+\phi} + \frac{S_2\epsilon\beta_{23}\phi^2}{\gamma(\gamma+\phi)^2}$$

$$a_{33} = \frac{\beta_{22}S_2}{\alpha+\lambda_2+\phi} + \frac{\beta_{23}S_2\phi}{(\alpha+\lambda_3)(\alpha+\lambda_2+\phi)} + \frac{\varepsilon\beta_{22}\theta_2\lambda_2S_2}{(\gamma+\phi)(\alpha+\lambda_2+\phi)} - \frac{S_2\epsilon\beta_{23}(-\alpha\theta_2\lambda_2\phi - \gamma\theta_3\lambda_3\phi - \theta_3\lambda_3\phi^2 - \theta_2\lambda_2\lambda_3\phi)}{\gamma(\alpha+\lambda_3)(\gamma+\phi)(\alpha+\lambda_2+\phi)}$$

$$a_{34} = \frac{\varepsilon\beta_{22}S_2}{\gamma+\phi} + \frac{S_2\epsilon\beta_{23}\phi}{\gamma(\gamma+\phi)}$$

$$a_{35} = \frac{\beta_{23}S_2}{\alpha+\lambda_3} + \frac{\theta_3\lambda_3S_2\epsilon\beta_{23}}{\gamma(\alpha+\lambda_3)}$$

$$a_{36} = \frac{S_2\epsilon\beta_{23}}{\gamma}$$

$$a_{51} = \frac{\beta_{32}S_3(\gamma^2\phi + 2\gamma\phi^2 + \phi^3)}{(\gamma+\phi)^2(\alpha+\lambda_1+\phi)(\alpha+\lambda_2+\phi)} + \frac{\beta_{33}S_3(\gamma^3\phi^2 + 2\gamma^2\phi^3 + \gamma\phi^4)}{\gamma(\alpha+\lambda_3)(\gamma+\phi)^2(\alpha+\lambda_1+\phi)(\alpha+\lambda_2+\phi)} + \frac{\beta_{31}S_3}{\alpha+\lambda_1+\phi} + \frac{S_3\epsilon\beta_{33}\left(\theta_3\lambda_3(\gamma^2\phi^2 + 2\gamma\phi^3 + \phi^4) - \phi(\alpha+\lambda_3)\left(-\theta_1\lambda_1\phi(\alpha+\lambda_2+\phi) - \left(\theta_2\lambda_2(\gamma\phi+\phi^2)\right)\right)\right)}{\gamma(\alpha+\lambda_3)(\gamma+\phi)^2(\alpha+\lambda_1+\phi)(\alpha+\lambda_2+\phi)} - \frac{\varepsilon\beta_{32}S_3\left(-\theta_1\lambda_1\phi(\alpha+\lambda_2+\phi) - \left(\theta_2\lambda_2(\gamma\phi+\phi^2)\right)\right)}{(\gamma+\phi)^2(\alpha+\lambda_1+\phi)(\alpha+\lambda_2+\phi)} + \frac{\varepsilon\beta_{31}\theta_1\lambda_1S_3}{(\gamma+\phi)(\alpha+\lambda_1+\phi)}$$

$$a_{52} = \frac{\varepsilon\beta_{32}S_3\phi}{(\gamma+\phi)^2} + \frac{\varepsilon\beta_{31}S_3}{\gamma+\phi} + \frac{S_3\epsilon\beta_{33}\phi^2}{\gamma(\gamma+\phi)^2}$$

$$a_{53} = \frac{\beta_{32}S_3}{\alpha+\lambda_2+\phi} + \frac{\beta_{33}S_3\phi}{(\alpha+\lambda_3)(\alpha+\lambda_2+\phi)} + \frac{\varepsilon\beta_{32}\theta_2\lambda_2S_3}{(\gamma+\phi)(\alpha+\lambda_2+\phi)} - \frac{S_3\epsilon\beta_{33}(-\alpha\theta_2\lambda_2\phi - \gamma\theta_3\lambda_3\phi - \theta_3\lambda_3\phi^2 - \theta_2\lambda_2\lambda_3\phi)}{\gamma(\alpha+\lambda_3)(\gamma+\phi)(\alpha+\lambda_2+\phi)}$$

$$a_{54} = \frac{\varepsilon\beta_{32}S_3}{\gamma+\phi} + \frac{S_3\epsilon\beta_{33}\phi}{\gamma(\gamma+\phi)}$$

$$a_{55} = \frac{\beta_{33}S_3}{\alpha+\lambda_3} + \frac{\theta_3\lambda_3S_3\epsilon\beta_{33}}{\gamma(\alpha+\lambda_3)}$$

$$a_{56} = \frac{S_3\epsilon\beta_{33}}{\gamma}$$

Notice that the eigenvalue of the matrix FV^{-1} satisfying the following characteristic equation:

$$\lambda^3(\lambda^3 - (a_{11}+a_{33}+a_{55})\lambda_2 - (a_{15}a_{51} + a_{35}a_{53} - a_{55}a_{33} - a_{11}a_{55} + a_{13}a_{31} - a_{11}a_{33})\lambda - a_{13}a_{35}a_{51} - a_{15}a_{31}a_{53} + a_{15}a_{33}a_{51} + a_{11}a_{35}a_{53} + a_{13}a_{31}a_{55} - a_{11}a_{33}a_{55}) = 0$$

DOI: 10.54254/2755-2721/14/20230752

Let

$$-a_{13}a_{35}a_{51} - a_{15}a_{31}a_{53} + a_{15}a_{33}a_{51} + a_{11}a_{35}a_{53} + a_{13}a_{31}a_{55} - a_{11}a_{33}a_{55}) = 0$$

Then we have

$$\lambda^4(\lambda^2 - (a_{11} + a_{33} + a_{55})\lambda - a_{15}a_{51} - a_{35}a_{53} + a_{55}a_{33} + a_{11}a_{55} - a_{13}a_{31} + a_{11}a_{33} = 0$$

$$\lambda_1 = 0,$$

$$\lambda_{2,3} = \frac{1}{2}\left(\pm\sqrt{a11^2 - 2a11a33 - 2a11a55 + 4a13a31 + 4a15a51 + a33^2 - 2a33a55 + 4a35a53 + a55^2} + a11 + a33 + a55\right)$$

$$R_0 = \lambda_{max} = \frac{1}{2}\left(\sqrt{a11^2 - 2a11a33 - 2a11a55 + 4a13a31 + 4a15a51 + a33^2 - 2a33a55 + 4a35a53 + a55^2} + a11 + a33 + a55\right)$$

Thus, the disease-free equilibrium will be stable if $R_0 < 1$, where R_0 is defined as above.

4. Sensitivity analysis

To do the sensitivity analysis, we firstly need a value assignment for each of the parameter. All the values assigned are based on the reasonable assumptions. However, we are more concerned about the change of R_0 with respect to some parameters when the others are fixed the rest.

It is important to mention that $R_0 > 1$ in this model means the certain celebrity will expand the fan base continuously, which is the favourable situation for the celebrity and his or her brokerage company.

Table 3. Value assignment.

Parameter	Value
β_{ii}	$\beta_{ii} = 0.2$
$\beta_{ij}, i \neq j$	$\beta_{ij} = 0.05$
ϵ	$\epsilon = 3$
ϕ	$\phi = \frac{1}{20}$
θ_i	$\theta_i = 0.7$
λ_i	$\lambda_i = 0.01$
α	$\alpha = 0.03$
γ	$\gamma = 0.001$

As we could see from the figures below, with α increasing, R_0 decreases slowly. However, γ is a dominant parameter that the basic reproduction number R_0 depends on. As we could see, R_0 drops sharply as γ increases. Practically, this means the idol's doesn't have to put too much weight on how to be perfect to endear the 'swing fans', who will change their mind more easily. To the contrary, they need to avoid absolutely negative events happening to preserve their most loyal believers.

The figure below illustrates the sensitivity of β_{11} & β_{13}. The yellow line describes the change of R_0 with respect to the coefficient β_{13}, the transmission probability between youths and the elder, and the blue line stands for that of β_{11}, the transmission probability among youths. It is clear that compared with β_{11}, increasing β_{13} is more efficient way to raise R_0. As a result, it is more vital to the publicity of celebrity to be multifaceted in order to be suitable for all ages rather than adhere to one particular group only. Otherwise the fan base of the celebrity will always be limited to a particular group of people. The result truly highlights the importance of the a broader fan base for a celebrity.

DOI: 10.54254/2755-2721/14/20230752

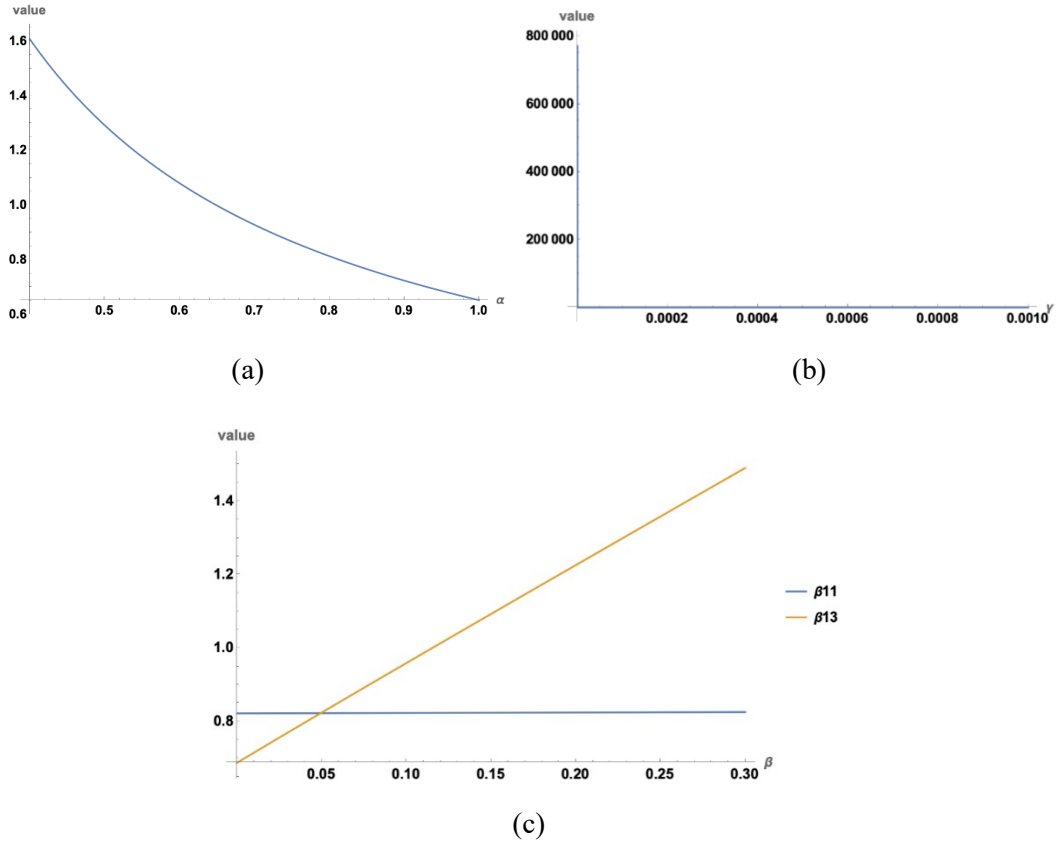

Figure 4. The graph of the basic reproduction number against different parameters: (a) the average probability of usual fans unfollowing their idols α; (b) the average probability of fanatics unfollowing their idols γ (c) the transmission probability among youths β_{11} and the transmission probability between youths and the elderβ_{13}.

5. Conclusion

Realistically speaking, the show business is not only an entertainment for the public, but has its own business value. In fact, it continues making profits and contributing to the economy all the time, to which celebrity endorsement is a common and effective way. This research mainly probes how the behaviour of a celebrity will influence his or her fan base from a mathematical perspective. Meanwhile, we also manage to improve the original SICR model to fit in our own purpose. At the end of the article, the sensitivity analysis also implies several advice for the celebrities and their brokerage company to help them better preserve and further increase the number of their admirers, which will maximize the value of their endorsement.

Finally, we should mention that for the sake of the simplicity and preservation of the basic property of SICR model, the effect of anti-fans (e.g. their negative comments) wasn't considered into our research. As some researches suggested, this is an important point while studying the audience behaviour but is often ignored [23]. We decide to leave it for future research.

Acknowledgements

We truly appreciate the precious and helpful advice our supervisor has provided.

DOI: 10.54254/2755-2721/14/20230752

References

[1] Zipporah, Mwendwa Mildred, and Hellen K. Mberia. "The effects of celebrity endorsement in advertisements." International Journal of Academic Research in Economics and Management Sciences 3.5 (2014): 178.

[2] Zipporah, Mwendwa Mildred, and Hellen K. Mberia. "The effects of celebrity endorsement in advertisements." *International Journal of Academic Research in Economics and Management Sciences* 3.5 (2014): 178.

[3] McCutcheon, Lynn E., Rense Lange, and James Houran. "Conceptualization and measurement of celebrity worship." *British journal of psychology* 93.1 (2002): 67-87.

[4] Reeves, Robert A., Gary A. Baker, and Chris S. Truluck. "Celebrity worship, materialism, compulsive buying, and the empty self." *Psychology & Marketing* 29.9 (2012): 674-679.

[5] Chung, Siyoung, and Hichang Cho. "Fostering parasocial relationships with celebrities on social media: Implications for celebrity endorsement." *Psychology & Marketing* 34.4 (2017): 481-495.

[6] Elberse, Anita, and Jeroen Verleun. "The economic value of celebrity endorsements." *Journal of advertising Research* 52.2 (2012): 149-165.

[7] Hung, Kineta, Kimmy W. Chan, and H. Tse Caleb. "Assessing celebrity endorsement effects in China: A consumer-celebrity relational approach." *Journal of advertising research* 51.4 (2011): 608-623.

[8] Van den Driessche, Pauline, and James Watmough. "Reproduction numbers and sub-threshold endemic equilibria for compartmental models of disease transmission." Mathematical biosciences 180.1-2 (2002): 29-48.

[9] Ma, Junling. "Estimating epidemic exponential growth rate and basic reproduction number." Infectious Disease Modelling 5 (2020): 129-141.

[10] D'Arienzo, Marco, and Angela Coniglio. "Assessment of the SARS-CoV-2 basic reproduction number, R 0, based on the early phase of COVID-19 outbreak in Italy." Biosafety and health 2.02 (2020): 57-59.

[11] Zou, Lan, Shigui Ruan, and Weinian Zhang. "On the sexual transmission dynamics of hepatitis B virus in China." Journal of theoretical biology 369 (2015): 1-12.

[12] Hethcote, Herbert W. "Qualitative analyses of communicable disease models." Mathematical biosciences 28.3-4 (1976): 335-356.

[13] Ji, Chunyan, and Daqing Jiang. "Threshold behaviour of a stochastic SIR model." Applied Mathematical Modelling 38.21-22 (2014): 5067-5079.

[14] Weiss, Howard Howie. "The SIR model and the foundations of public health." Materials matematics (2013): 0001-17.

[15] Zan, Yongli, et al. "SICR rumor spreading model in complex networks: Counterattack and self-resistance." *Physica A: Statistical Mechanics and its Applications* 405 (2014): 159-170.

[16] Qiao, Meihong, Anping Liu, and Urszula Foryś. "Qualitative analysis of the SICR epidemic model with impulsive vaccinations." *Mathematical Methods in the Applied Sciences* 36.6 (2013): 695-706.

[17] Li, Michael Y., and James S. Muldowney. "Global stability for the SEIR model in epidemiology." *Mathematical biosciences* 125.2 (1995): 155-164.

[18] Caccavo, Diego. "Chinese and Italian COVID-19 outbreaks can be correctly described by a modified SIRD model." *MedRxiv* (2020).

[19] Acemoglu, Daron, Victor Chernozhukov, Iván Werning, and Michael D. Whinston. 2021. "Optimal Targeted Lockdowns in a Multigroup SIR Model." American Economic Review: Insights, 3 (4): 487-502.

[20] Hackley, Chris, and Rungpaka Amy Hackley. "Marketing and the cultural production of celebrity in the era of media convergence." Journal of marketing management 31.5-6 (2015): 461-477.

[21] Beretta, Edoardo, and Vincenzo Capasso. Global stability results for a multigroup SIR epidemic model. na, 1988.

DOI: 10.54254/2755-2721/14/20230752

[22] Yang, Kuen-Cheh, et al. "Cost-effectiveness analysis of universal influenza vaccination: Application of the susceptible–infectious–complication–recovery model." *International Journal of Infectious Diseases* 73 (2018): 102-108.
[23] Gray, Jonathan. "New audiences, new textualities: Anti-fans and non-fans." *International journal of cultural studies* 6.1 (2003): 64-81.