Proceedings of CONF-MCEE 2027 Symposium: Innovative Environmental Engineering Strategies for a Sustainable Future
DOI: 10.54254/2755-2721/2027.MD39204

Research Progress on the Preparation of Cobalt Hydroxide Materials and Their Application in Supercapacitors

Yiming Dong

School of Chemistry, Sichuan University, Chengdu, China
1463253838@qq.com

Abstract. Against the background of the rapid development of the new energy storage industry, supercapacitors have attracted much attention because of their advantages of fast charging and discharging, high power density, long cycle life and good safety. Electrode materials are the key to determining their performance; cobalt hydroxide ($Co(OH)_2$), with its layered structure, high theoretical specific capacitance and reversible redox properties, has become a pseudocapacitive electrode material with great potential, but pure $Co(OH)_2$ has problems such as poor conductivity, easy destruction of the structure during cycling and rate decay. Following the logic of "crystal structure-synthesis method-modification strategy-device performance", this paper systematically reviews the research progress of $Co(OH)_2$ and its composite materials in supercapacitors. Through the structural analysis of $Co(OH)_2$ materials and a summary of preparation methods, as well as an analysis of modification strategies for cobalt-based materials such as morphology control, ion intercalation, heteroatom doping, carbon-based composite and heterostructure construction, the electrochemical performance and advantage ranges of various materials are finally summarized, and key bottlenecks such as the heterointerface synergy mechanism, the preparation parameter-structure-performance relationship and the mass transfer limitation of high-load electrodes are pointed out; this paper can provide a theoretical reference for the rational design and performance optimization of $Co(OH)_2$-based supercapacitor electrodes.

Keywords: cobalt hydroxide, supercapacitor, composite materials, electrochemical performance, structural design

1. Introduction

With the tightening constraints of fossil energy and the advancement of the "dual carbon" goals, energy industries such as new energy power generation, electric vehicles and smart grids have put forward urgent demands for efficient energy storage devices. Relying on their advantages of fast charging and discharging, high power, ultra-long cycle life, wide operating temperature range and high safety, supercapacitors see continuously growing demand in the fields of portable electronics, new energy vehicles and grid peak regulation [1]. Electrode materials determine the core performance of supercapacitors; carbon-based materials store charges only through the electric double layer, which is relatively stable but has low capacity; transition metal hydroxides achieve high pseudocapacitance through reversible redox reactions and have become the key to improving

© 2026 The Authors. This is an open access article distributed under the terms of the Creative Commons Attribution License 4.0 (https://creativecommons.org/licenses/by/4.0/).

DOI: 10.54254/2755-2721/2027.MD39204

energy density. Cobalt hydroxide ($Co(OH)_2$) is a typical layered transition metal hydroxide that provides ultrahigh pseudocapacitance through reversible Co^{2+}/Co^{3+} redox reactions, and has the advantages of high theoretical capacity, rich redox activity, easily available raw materials and mild preparation processes, making it a popular system of great interest among pseudocapacitive electrode materials [2, 3]. However, pure $Co(OH)_2$ has poor conductivity, its structure is easily destroyed during cycling, and its rate decay is obvious, which limits its practical application. To solve the above performance defects, various morphology control and composite modification technologies have been widely developed by researchers; for example, Tang et al. used graphite, nickel nitrate and cobalt nitrate as raw materials and a dual-solvothermal system to prepare petal-like spherical $NiCo_2O_4$/rGO composite particles, increasing the electrode capacity retention by 84.5% [4]; Sun et al. prepared K^+/Cl^- co-intercalated $Co(OH)_2$ by electrodeposition, effectively improving the power density and energy density [5]. Current research has covered the whole chain of controllable preparation, structure optimization, electrolyte matching and device assembly, but the regulation rules of preparation parameters on grains and pores, the heterointerface synergy mechanism and the mass transfer limitation of high-load electrodes still lack systematic summary.

Based on the above background, this paper takes cobalt hydroxide-based supercapacitor electrode materials as the object and develops a review following the logic of "crystal structure-synthesis method-modification strategy-device performance", sorting out the existing achievements, clarifying the existing bottlenecks, and providing systematic theoretical support for the optimization of cobalt hydroxide-based supercapacitor electrodes. This paper systematically describes the crystal structure of cobalt hydroxide and the pseudocapacitive energy storage mechanism, fully reviews mainstream synthesis processes such as chemical precipitation, hydrothermal/solvothermal synthesis and electrochemical deposition, deeply analyzes the action mechanisms of modification methods such as morphology control, element doping, carbon-based composite and multivariate heterostructure, elucidates the internal structure-property relationship of "preparation process-microstructure-ion/electron transport-electrochemical performance", and points out existing key problems such as high-load electrodes, interface stability and the consistency of large-scale synthesis, providing a theoretical reference for the development and further optimization of high-performance cobalt hydroxide pseudocapacitive electrodes.

2. Overview of supercapacitors and their devices

2.1. Overview of supercapacitors

A supercapacitor is a new type of electrochemical energy storage device capable of fast charging and discharging; it was first invented by H. Becker in 1957 and continued to achieve breakthroughs in the second half of the 20th century. Today, various high-performance and multifunctional supercapacitors have been widely used, providing a series of novel methods for solving social energy problems [6]. According to the energy storage mechanism, supercapacitors can be divided into electric double-layer capacitors and Faraday pseudocapacitors. The working principle of an electric double-layer capacitor is to store energy through the electrochemical double layer formed at the electrode/electrolyte interface; a Faraday pseudocapacitor mainly stores energy by electroactive substances carrying out reactions such as underpotential deposition, highly reversible chemical adsorption/desorption or oxidation/reduction in two-dimensional or quasi-two-dimensional spaces on the electrode surface or in the bulk phase [7]. Traditional lead-acid and nickel-cadmium batteries have problems such as short cycle life, sensitivity to ambient temperature, low power density, slow charging and discharging, complex maintenance and environmental pollution risks. In contrast,

DOI: 10.54254/2755-2721/2027.MD39204

supercapacitors have both the high discharge power advantage of electrostatic capacitors and a relatively high charge capacity; in addition, they have the advantages of flexible capacity configuration, support for modular design and easy maintenance, and are well suited to power usage scenarios requiring high power, frequent charging and discharging, fast response and long cycle life [8].

2.2. Supercapacitor devices

The device structure of a supercapacitor is similar to that of a traditional chemical battery, mainly including current collectors, positive and negative electrode active materials, electrolyte and separators; the active materials are loaded on the current collectors, the separator is electronically insulating and allows ions to pass, and the current collector is used to collect current. The typical structure and charge storage process of an electric double-layer supercapacitor (EDLCs) are shown in Figure 1; it stores charge in a non-Faradaic manner: anions and cations in the electrolyte are electrostatically adsorbed on the surfaces of the positive and negative electrodes respectively during charging, forming a double layer, and desorbed during discharging, with no charge transfer occurring in the process. The device structure of a pseudocapacitive supercapacitor (PCs) is similar to that of EDLCs, and its charge storage mechanism is shown in Figure 2: it mainly comes from fast, reversible Faradaic redox reactions on the surface/near-surface (or interlayer) of the electrode material, accompanied by the adsorption/intercalation and deintercalation of electrolyte ions; in addition, there is usually an electric double layer contribution.

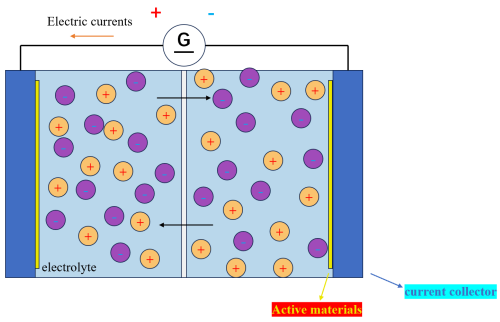

Figure 1. Schematic diagram of a double-layered supercapacitor device

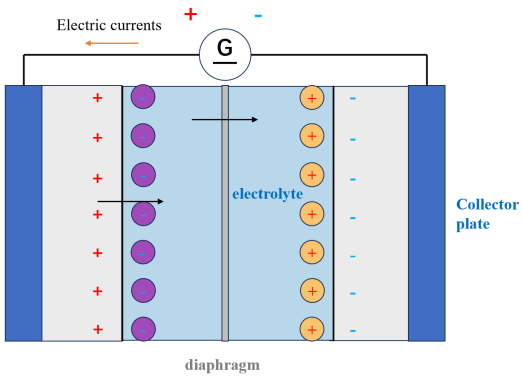

Figure 2. Schematic diagram of pseudocapacitive supercapacitor device

DOI: 10.54254/2755-2721/2027.MD39204

3. Energy storage principles of supercapacitors

3.1. Energy storage principle of electric double-layer supercapacitors (EDLCs)

When an electric double-layer capacitor stores energy, electrolyte ions store charge through electrostatic adsorption and desorption at the electrode/electrolyte interface; this is a physical energy storage process, and the electrode material undergoes no valence change or charge transfer. During charging, the electrolyte solution forms an applied electric field, and the anions and cations in the electrolyte move toward the positive and negative electrodes respectively, adsorbing onto the positive and negative charges on the surface of the electrode material and forming positive and negative charge layers. During discharging, while electrons migrate through the external circuit, the anions and cations inside the capacitor migrate again from the surfaces of the positive and negative electrodes into the electrolyte solution and no longer produce electrostatic adsorption with the electrode surface, so the charge release of the external circuit is completed; the principle is roughly shown in Figure 3. It can be seen that the ion or charge transfer on the surface of the electrode material of an electric double-layer capacitor does not involve redox reactions, and the charge transfer time is short, which also reflects the characteristic that electric double-layer capacitors store and release energy faster; compared with traditional ion batteries and Faraday batteries, they have higher power density and show better cycling stability [2].

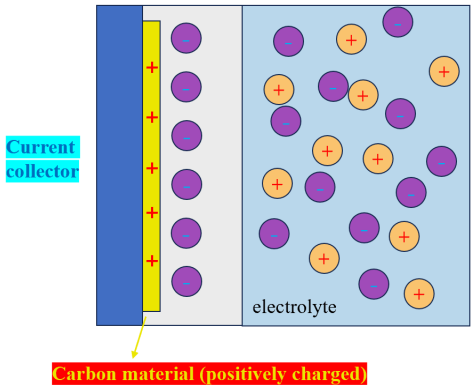

Figure 3. Energy storage principle of double layer capacitor

3.2. Energy storage principle of pseudocapacitive supercapacitors (PCs)

The energy storage mechanism of pseudocapacitive supercapacitors lies between that of traditional capacitors and batteries. As shown in Figure 4, compared with electric double-layer supercapacitors, pseudocapacitors store charge through ion adsorption on the surface of active electrode materials and fast reversible Faradaic redox reactions near the surface. Because Faradaic reactions can occur not only on the electrode surface but also near the electrode surface, the specific capacity and energy density of PCs are both higher than those of EDLCs. According to different energy storage mechanisms, pseudocapacitive supercapacitors have different branches such as underpotential deposition capacitance, redox capacitance and intercalation capacitance. Underpotential deposition pseudocapacitance refers to the charge transfer reaction of adsorbing hydrogen atoms on noble metals and electrodepositing metal cations below the equilibrium potential; this type of pseudocapacitance provides a smaller energy density. Redox pseudocapacitance generally arises from Faradaic reactions occurring at the electrode/electrolyte interface on or near the surface of

DOI: 10.54254/2755-2721/2027.MD39204

active electrode materials, and the valence state of the metal element changes during the reaction; it is common in pseudocapacitive materials such as RuO_2 and MnO_2. Intercalation pseudocapacitance refers to Faradaic charge transfer occurring when ions in the electrolyte insert into the pores or interlayers of some layered materials (such as TiO_2, Nb_2O_5 and MoO_3), without crystallographic phase transformation, and has a reversible and fast charge storage rate [9].

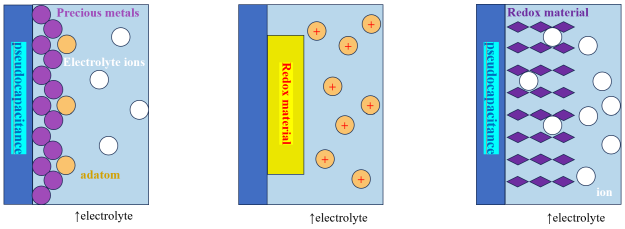

Figure 4. Principle of pseudo capacitive energy storage

4. Selection of electrode materials for supercapacitors

4.1. Carbon materials

The appropriate selection and design of electrode materials is crucial to the performance of supercapacitors. Compared with other materials, carbon-based materials have a higher specific surface area, more stable performance, more advanced synthesis technology and lower cost, and have good compatibility with other materials, so they are mostly used as electrode materials for electric double-layer capacitors [10].

The current mainstream carbon materials include activated carbon, carbon nanotubes, graphene and the like; activated carbon is the carbon material applied earliest in supercapacitors, and has performance advantages such as high specific surface area and porous structure, and can be prepared from various easily available natural organic substances such as cellulose and starch; carbon nanotubes have relatively regular pore structure, high specific surface area, high electrical conductivity and chemical stability, can accelerate ion diffusion and electron transport inside the electrode material, and can increase their hydrophilicity through surface activation and modification or be combined with metal oxides to prepare composite materials and solve the self-discharge problem, making them excellent supercapacitor electrode materials; graphene has the largest theoretical specific surface area of 2630 m^2/g, can also form an electric double layer, which is favorable for electrolyte diffusion, and has good capacitance performance. There are also zero-dimensional material branches such as carbon nano-onions (CNOs) and carbon quantum dots (CQDs), which have excellent performance in terms of specific capacitance, power density and energy density [11, 12].

4.2. Metal oxides

Metal oxides are often used as electrode materials for pseudocapacitive capacitors, and such materials have significant advantages in electrode performance (energy density, power density, stability, etc.) and material cost.

RuO_2 has become one of the most studied metal oxides for pseudocapacitive capacitor electrodes because of its excellent chemical and thermal stability, high electrical conductivity, wide voltage window, highly reversible redox reactions, long cycle life and high theoretical specific capacitance, and researchers have carried out much work on the preparation of electrode active substances with

DOI: 10.54254/2755-2721/2027.MD39204

large specific surface area, composite with other materials, and electrode assembly [13, 14]. Similar materials include manganese oxide, cobalt oxide and nickel oxide; through hydrogenation treatment, high-temperature vapor deposition, binary composite and other means, composite electrodes with high specific capacitance can be obtained at a relatively low price, effectively realizing the replacement of RuO_2 [7].

4.3. Conductive polymers and other materials

Conductive polymers are another important electrode material for pseudocapacitive supercapacitors; electrodes prepared from such materials have the characteristics of low cost, high capacity, short charging and discharging time, environmental friendliness and high safety, and have attracted wide attention from researchers. The more mature ones at present include polyaniline, polypyrrole, polythiophene and polyindole, and their performance can also be regulated and improved by doping during polymerization.

Besides the three types of materials mentioned above, layered materials and metal-organic frameworks/covalent organic frameworks have also attracted attention in recent years; for example, the team of K. Brezesinski discovered the pseudocapacitive behavior of orthorhombic T-Nb_2O_5 in the early 2010s, the team of M. Naguib first developed MXene in 2011, and high-capacitance nanoporous/layered materials such as LDH and MOF have also been studied [13].

5. Introduction to cobalt hydroxide materials

When used as pseudocapacitive electrode materials, metal hydroxides usually have a two-dimensional layered structure and carry out charge transfer through redox reactions in an alkaline environment; for example, cobalt-based materials exploit the valence tunability of cobalt, and cobalt ions of different valence states can absorb and release electrons from each other, realizing energy storage and release. Such materials have the advantages of high theoretical specific capacitance, excellent electrochemical performance under alkaline conditions, easy regulation and modification, low cost and environmental friendliness, and have been widely used in the field of supercapacitor positive electrode materials [3]. Table 1 shows the cobalt hydroxide materials (and composite materials) studied in recent years and their preparation methods.

Cobalt hydroxide can be divided into two types: one is α-$Co(OH)_2$ with a hydrotalcite-like structure, and the other is β-$Co(OH)_2$ with a brucite-like structure. Among them, the surface of α-$Co(OH)_2$ is positively charged and its interlayers contain various anions, giving it a large interlayer spacing, which is favorable for the diffusion and rapid transfer of electrolyte ions and provides more redox active sites; in addition, cobalt hydroxide and its charged phases have structural similarity, which improves its electrochemical performance, and its theoretical capacitance is higher than 3000 F/g, making it a suitable electrode material for supercapacitors [2]. The current methods for preparing cobalt hydroxide mainly include chemical precipitation, electrochemical deposition and hydrothermal synthesis. Chemical precipitation is a method of using the reaction between metal ions and a precipitant to prepare a precursor and then calcining the prepared precursor at high temperature. This preparation method is simple, the product is easy to control, it has little environmental impact and is suitable for industrial production; however, cobalt hydroxide prepared by this method is prone to hardening and agglomeration, which affects the electrochemical activity of the product, and this problem needs to be avoided by regulating the reactant concentration and the pH of the solution; Sang et al. used cobalt chloride and organic amines as raw materials and an organic amine co-precipitation method to prepare spherical cobalt hydroxide, and determined that

DOI: 10.54254/2755-2721/2027.MD39204

under this preparation scheme, when the cobalt chloride concentration was 1.5 mol/L, the stirring speed was 560 r/min, the reaction temperature was 65 °C and the reaction time was 2 h, the particle size and morphology of the product were optimal [15]. Electrochemical deposition is a method of uniformly depositing cobalt ions onto a substrate at a certain rate by controlling a certain potential or current to obtain amorphous cobalt hydroxide thin films of different densities. This preparation method is relatively simple and the film thickness is easy to control; Yu et al. used this method to synthesize nano cobalt hydroxide porous films, which have excellent electrochemical performance in specific potential windows and chemical environments. Hydrothermal synthesis refers to carrying out aqueous-phase reactions in a specially designed closed reactor-high-pressure reactor; by heating the closed system to generate autogenous steam pressure, a high-temperature and high-pressure reaction environment is obtained, so that sparingly soluble or insoluble substances dissolve and recrystallize for chemical synthesis and material treatment; it is an effective method in which the products obtained under optimized conditions have high purity, good dispersibility and easily controlled particle size; Jiang et al. used this method to prepare α-$Co(OH)_2$ nanowires, and the capacitance showed good specific capacitance, excellent rate capacitance properties and cycling stability [16].

The layered structure of cobalt hydroxide is favorable for ion diffusion and reaction, and thus gives it strong energy storage capacity. However, in practical applications, its inherent defects such as low material utilization and poor rate performance cannot be ignored; therefore, it is often modified by various means, or combined with other materials to prepare composite electrodes to further improve the electrochemical performance. Sun et al. prepared cobalt hydroxide with different intercalated ions by changing the electrolyte ions through electrodeposition, carried out systematic characterization, analysis and comparison of the various electrodes, and optimized the cobalt hydroxide electrode co-intercalated with chloride and potassium ions, effectively improving the power density and energy density [5]; Wang et al., based on the mechanism that "both potassium ferricyanide and potassium ferrocyanide can contribute capacitance in the electrolyte", added redox electrolytes to the two poles respectively, constructed an asymmetric supercapacitor and a high-activity $Co(OH)_2$ composite electrode, and effectively constructed a hybrid asymmetric supercapacitor with high energy density [17]. Lai et al., based on the characteristics of the flower-like spherical $Co_3O_4/Co(OH)_2$, which has a large specific surface area, a series of relatively short ion diffusion channels and an internally interconnected porous network structure and is favorable for the rapid transfer of electrolyte ions, synthesized a series of flower-like spherical cobalt-based materials with ultrathin sheet structures (such as DBS-$Co(OH)_2$) by the solvothermal method, prepared aerogels such as 3D rGO as electric double-layer capacitor negative electrode materials, and further assembled an asymmetric supercapacitor as an energy storage device, showing excellent electrochemical performance and good practical application prospects [18].

Table 1. Cobalt hydroxide materials (and composite materials) and their preparation methods

No.	Material type	Raw materials	Preparation method
1	α-$Co(OH)_2$	cobalt chloride hexahydrate ($CoCl_2·6H_2O$)/cobalt nitrate hexahydrate ($Co(NO_3)_2·6H_2O$)	chemical precipitation, one-step hydrothermal method, electrodeposition [16]
2	β-$Co(OH)_2$	cobalt chloride hexahydrate ($CoCl_2·6H_2O$)	chemical precipitation, hydrothermal method, solid-phase reaction [19]

DOI: 10.54254/2755-2721/2027.MD39204

Table 1. (continued)

3	K^+ and Cl^- co-intercalated $Co(OH)_2$ composite	cobalt nitrate hexahydrate ($Co(NO_3)_2·6H_2O$), potassium chloride (KCl)	constant-current electrodeposition [5]
4	flower-like spherical cobalt-based materials (such as DBS-$Co(OH)_2$)	cobalt nitrate hexahydrate ($Co(NO_3)_2·6H_2O$), sodium dodecylbenzenesulfonate (SDBS)	solvothermal method [18]
5	cobalt hydroxide-porous carbon composites	cobalt salts (such as $CoCl_2·6H_2O$ and $Co(NO_3)_2·6H_2O$), porous carbon materials (such as activated carbon and biomass-derived porous carbon)	chemical precipitation, hydrothermal method, direct synthesis in water-isopropanol systems, potentiodynamic scanning [16, 17, 20]

6. Performance analysis of cobalt hydroxide applied in supercapacitors

Different cobalt hydroxide electrode materials differ significantly in electrochemical performance, specific surface area, energy density and other aspects, and these differences give them different performance characteristics and advantage ranges. In order to improve the application value, cobalt hydroxide-based electrode materials are often composited or doped to improve electrode performance and stability. Table 2 shows the performance of existing cobalt hydroxide materials and a comparison of their advantages and disadvantages.

When carbon nanotubes, graphene, other porous carbon and other materials are made into composite materials with cobalt hydroxide, they have a high specific capacitance in a stable state. For example, the three-dimensional nanostructured $Co(OH)_2$/CNT flexible composite material reached a first discharge specific capacitance of 2764 F/g at a current density of 2 A/g, and the stable specific capacitance could be maintained at about 1200 F/g; another example is the α-$Co(OH)_2$/EA-CNT paper flexible composite thin film material with a three-dimensional channel structure, whose specific capacitance reached 1856 F/g at a scan rate of 20 mV/s, and after 1500 charge-discharge cycles it still had a specific capacitance retention of 80% [20]. Introducing anions and cations into transition metal hydroxide materials can also effectively improve the electrochemical performance of such materials. For example, for the dual-ion-intercalated (Cl^- and K^+) hydroxide with a cobalt-nickel ratio of 1:3, its specific capacitance can reach 1405.9 F/g at a current density of 2 A/g, and even at a high current density of 50 A/g its specific capacitance can still be maintained at 1120.0 F/g, with a capacity retention of 79.7% [17]. In another study, flower-like spherical cobalt-based materials with a large specific surface area, ion diffusion channels and an internally interconnected porous network structure were selected as the pseudocapacitive positive electrode, and the nitrogenene-chemically-modified flower-like spherical Co_3O_4-CNT > N-PEGm composite material showed a relatively large specific capacitance of 1513.2 F/g at a current density of 0.5 A/g, and a relatively high energy density of 42.6 Wh/kg was measured at a power density of 400 W/kg [18].

Some studies have also partially replaced the cobalt atoms in the cobalt hydroxide lattice with other metal atoms (such as aluminum, nickel, ruthenium, lanthanide metals, etc.) and sulfur atoms, that is, doping. The 3S-ZnO/NC electrode was obtained through S-doped ZnO/NiXCo_1-X$(OH)_2$, with a specific capacity of 1530 F/g at 1 A/g, showing a high energy density of 82.15 Wh/kg at a power density of 375 W/kg, as well as good cycling performance (after 10000 cycles, the specific capacity retention was 102.69%) [21]; another feasible idea is to dope sulfur-containing organic matter, and the morphology of the original $Co(OH)_2$ can be changed according to the selected sulfur compound, effectively improving the specific capacitance (under optimal conditions it can reach

DOI: 10.54254/2755-2721/2027.MD39204

1687.9 F/g at 1 A/g); the Ni_3S_4@$Co(OH)_2$ electrode material is constructed from an interlaced morphology of nanoneedles and nanosheets, has a heterostructured conductive network, and shows a larger specific surface area and more active sites, giving the material better electrochemical performance (the areal specific capacitance reached 2754.53 mF/cm² at 1 mA/cm², with excellent capacity retention) [2, 9].

Table 2. Performance of cobalt hydroxide materials and comparison of advantages and disadvantages

No.	Material category	Performance				Advantages	Disadvantages
		Specific capacitance	Capacity retention	Power density	Energy density		
1	cobalt hydroxide-porous carbon composites	1442–2764 F/g	43%–105.82%	1416 W/kg	76.7 Wh/kg	synergy of high specific surface area and conductive network; capacity can grow through activation	relatively cumbersome preparation process; large span of capacity retention [20]
2	K^+ and Cl^- co-intercalated $Co(OH)_2$ composite	1405.9 F/g	79.7%	478.6 W/kg	39.8 Wh/kg	both specific capacitance and cycling stability; the layered structure is favorable for ion diffusion	strict preparation conditions; long reaction kinetics [5]
3	flower-like spherical cobalt-based materials (such as DBS-$Co(OH)_2$)	maximum 1513.2 F/g (depending on reaction conditions)	59.18%–87.28% (depending on reaction conditions)	400 W/kg	42.6 Wh/kg	unique three-dimensional hierarchical structure; low resistance and high specific capacitance	the α phase is a metastable structure that is prone to phase transformation and loss of cycling performance; highly sensitive to reaction conditions [18]
4	metal/sulfur atom-doped cobalt hydroxide composites	1530 F/g	75.82%	375 W/kg	82.2 Wh/kg	large specific surface area with fully exposed active sites; extremely high energy density	the structure is prone to collapse during charging and discharging, and cycling stability is low [21]
5	sulfur-containing organic matter-doped cobalt hydroxide composites	1687.9 F/g	83.0%	800.0 W/kg	61.1 Wh/kg	fast and efficient formation of defect structures; high power density and energy density	the distribution uniformity of the doped sulfur source has a great influence on performance; some mechanisms are still unclear [9]

7. Conclusions

This paper focuses on cobalt hydroxide-based supercapacitor electrode materials and presents a systematic review from the aspects of the principle overview of supercapacitors, the selection of electrode materials, the preparation methods of $Co(OH)_2$ and its composite materials, modification strategies and device performance, systematically sorting out the research progress of $Co(OH)_2$ as a pseudocapacitive electrode material, with emphasis on analyzing the influence mechanism of different composite materials on electrode performance. $Co(OH)_2$ has a layered structure, in which the relatively large equal spacing and abundant active sites give it a high theoretical specific capacitance. Among these materials, cobalt hydroxide-porous carbon composite materials can achieve capacity activation growth after multiple cycles by introducing a carbon skeleton as mechanical support; flower-like spherical cobalt-based materials provide abundant active sites

DOI: 10.54254/2755-2721/2027.MD39204

through a unique three-dimensional hierarchical structure, and the intercalation structure provides a high specific capacitance and cycling stability; heteroatom-doped cobalt-based materials show relatively balanced performance and can effectively improve the energy density of the electrode material. Although the inherent problems of $Co(OH)_2$-type materials, namely the easy collapse of the cyclic structure and rate decay, have not been completely solved, and the current research on the heterointerface synergy mechanism and the preparation parameter-structure-performance relationship is still shallow, their advantages such as high specific capacitance, diverse composite methods and environmental friendliness make them pseudocapacitive electrode materials with great potential, showing good application prospects. Through the classification and analysis of existing research results, this paper not only systematically sorts out the overall advantages and disadvantages of current cobalt-based materials, but also provides research ideas and theoretical support for the future development of high-load, high-stability and practical pseudocapacitive electrode materials.

References

[1] Li, J. H., Wu, P. Y., Li, G. F., et al. (2025). Application of supercapacitor energy storage in short-time high-frequency power supplementation scenarios of new power systems. *Electrical Technology, 26*(11), 18-26.

[2] Chen, X. C. (2023). *Preparation of cobalt hydroxide-based supercapacitor electrode materials and analysis of energy band changes* [Doctoral dissertation]. University of Jinan.

[3] Yang, B. N. (2025). *Structural regulation of cobalt-based electrode materials and their supercapacitor performance* [Doctoral dissertation]. Wuhan Institute of Technology.

[4] Tang, H., & Chen, X. H. (2026). Preparation of $NiCo_2O_4$/rGO composites and their electrochemical performance. *Packaging Journal, 18*(5), 91-98.

[5] Sun, Z. H. (2020). *Structural optimization of layered transition metal hydroxides and their application in supercapacitors* [Doctoral dissertation]. Lanzhou University.

[6] Deng, X. K. (2025). *Construction of supercapacitors based on metal compound/polyindole nanocomposites and their performance research* [Doctoral dissertation]. Qingdao University of Science and Technology.

[7] Sun, Y., Huang, N. B., Wang, D. C., et al. (2018). Research progress of pseudocapacitive supercapacitor electrode materials. *Chinese Journal of Power Sources, 42*(5), 747-750.

[8] Zhang, H. Y. (2006). *Research on the analysis and control technology of supercapacitor DC energy storage systems* [Doctoral dissertation]. Graduate University of the Chinese Academy of Sciences.

[9] Zhao, L. (2023). *Electrochemical doping of cobalt hydroxide with sulfur and its supercapacitor performance* [Doctoral dissertation]. Chongqing University.

[10] Wei, Z. S., Wu, L., Li, L., et al. (2023). Flexible supercapacitors and their research progress. *Progress in Textile Science and Technology*(3), 1-5.

[11] Jiao, C., Zhang, W. K., Su, F. Y., et al. (2017). Research progress of supercapacitor electrode materials and electrolytes. *New Carbon Materials, 32*(2), 106-115.

[12] Guo, W. B., Chen, J. L., Liu, J. L., et al. (2019). Research progress of carbon-based electrode materials for supercapacitors. *Electronic Components and Materials, 38*(1), 1-8.

[13] Sun, X. W., Zhang, K. L., Li, C., et al. (2025). Overview of supercapacitors: Mechanism, materials, devices and safety characteristics. *Advanced Technology of Electrical Engineering and Energy, 44*(10), 117-135.

[14] Zhu, X. F., Jing, X. Y., & Zhang, M. L. (2002). Metal oxide supercapacitors and research progress in their applications. *Journal of Functional Materials and Devices, 8*(3), 325-330.

[15] Sang, Z. R., Han, P. L., Luo, Z., et al. (2022). Preparation of quasi-spherical cobalt hydroxide by organic amine co-precipitation. *Journal of Wuhan Institute of Technology, 44*(6), 643-647.

[16] Zhao, C. M., Ren, F., & Chang, L. M. (2016). Research progress of cobalt hydroxide for supercapacitors. *Chinese Journal of Power Sources, 40*(9), 1893-1895.

[17] Wang, H. X. (2018). *Composite and modification of cobalt hydroxide electrodes and construction of novel supercapacitors* [D]. Jilin University.

[18] Lai, C. W. (2018). *Design and preparation of 3D flower-like spherical cobalt-based materials and their application in supercapacitors* [D]. Southeast University.

DOI: 10.54254/2755-2721/2027.MD39204

[19] Feng, Z. H., Han, S. M., Li, Y., et al. (2008). Preparation of β-$Co(OH)_2$ and study of its electrochemical performance. *Journal of Yanshan University, 32*(6), 521-524.
[20] Men, C. Y. (2014). *Preparation and electrochemical performance of cobalt (hydr)oxide/carbon nanotube paper flexible composites* [D]. Xinjiang University.
[21] Zhu, J. L. (2025). *Preparation of cobalt hydroxide-based electrode materials and their energy storage performance in alkaline capacitive batteries* [D]. Inner Mongolia University.