Proceedings of the 7th International Conference on Materials Chemistry and Environmental Engineering
DOI: 10.54254/2755-2721/2027.39136

Towards Energy-Efficient Non-thermal Plasma Chemistry: Lessons from CO_2 Splitting and Ammonia Synthesis

Yueyao Zhao

School of Chemistry and Chemical Engineering, Nanjing University of Science and Technology, Nanjing, China
a3267196355@163.com

Abstract. Non-thermal plasma (NTP) offers a promising route for electrifying chemical processes by enabling the activation of stable molecules under relatively mild conditions. However, evaluating the plasma process only by conversion or product yield may mask the substantial energy losses associated with power supply, electron excitation, molecular activation, and gas heating. This review examines energy efficiency in NTP-assisted CO_2 splitting and ammonia synthesis as two representative model systems to investigate the energy efficiency in NTP-assisted chemical conversion. For CO_2 splitting, different plasma discharges are compared in terms of CO_2 conversion, specific energy input and energy efficiency. For ammonia synthesis, the effects of discharge mode, reactor configuration, catalyst properties and suppression of NH_3 decomposition on energy yield are evaluated. Across both systems, higher conversion or product yield does not necessarily correspond to more efficient energy utilisation. Instead, the energy performance is dominated by the coupling between electrical energy deposition, molecular activation, plasma-surface interaction, and inhibition of non-productive pathways such as gas heating, recombination, and product decomposition. This comparison further highlights the need for consistent system boundaries and energy-accounting protocols, particularly when distinguishing plasma-level efficiency from overall process efficiency. Future development should therefore move beyond single-parameter optimisation towards integrated, full-chain energy management to guide the rational design and scale-up of energy-efficient plasma chemical processes.

Keywords: Non-thermal Plasma, Energy Efficiency, CO_2 Splitting, Ammonia Synthesis

1. Introduction

Global climate change has become one of the most pressing challenges of the 21st century. According to a recent report by the International Energy Agency, global energy-related CO_2 emissions are expected to keep rising in 2026, adding roughly 145 million tonnes of CO_2 to the atmosphere and pushing atmospheric CO_2 concentrations to about 427 parts per million, roughly 50% above pre-industrial levels [1]. In response to this growing crisis, the international community has adopted a multi-pronged strategy to reduce emissions, including reducing dependence on fossil fuels, expanding renewable energy sources such as wind and solar energy, and developing carbon

© 2026 The Authors. This is an open access article distributed under the terms of the Creative Commons Attribution License 4.0 (https://creativecommons.org/licenses/by/4.0/).

DOI: 10.54254/2755-2721/2027.39136

capture, utilisation and storage technologies. Among these efforts, carbon conversion technologies that convert CO_2 into high value-added chemicals and fuels are particularly attractive because they can combine emission reduction with carbon cycle, thereby promoting the development of a circular carbon economy.

CO_2 conversion technology has developed rapidly in recent years, which can be roughly divided into three categories: traditional thermal catalysis, photocatalysis, and electrocatalysis. Traditional thermal catalysis is still the dominant industrial method, which usually requires high temperature (generally 200–500 °C) and high pressure, and relies heavily on fossil fuel combustion to provide the required heat. Although technologically mature, this approach inevitably incurs additional CO_2 emissions and is therefore not fully aligned with carbon neutrality goals. Photocatalysis, by contrast, can in principle operate under the ambient conditions and directly use the solar energy, making it an appealing sustainable option. However, its practical application is still restricted by low solar-to-chemical conversion efficiency, usually less than 1%, limited visible light utilisation, and poor product selectivity due to competing hydrogen evolution reaction [2]. In addition, the stability of the catalyst and engineering problems in the scale-up process such as light distribution, mass transfer, and long-term durability remain unresolved, limiting its industrial application. Compared with these routes, electrically driven catalytic processes have attracted increasing interest because they can be powered directly by intermittent renewable electricity from wind, solar energy and other low-carbon sources [3]. In this broader electrification trend, non-thermal plasma (NTP) processes, including plasma catalysis, are particularly prominent due to their unique non-equilibrium characteristics [4].

Plasma is often referred to as the fourth state of matter, which is formed when an electric field is applied to ionise the gas, resulting in a complex mixture of electrons, ions, free radicals, excited species, atoms and molecular fragments. In NTP, the energy of electrons is much higher than that of the host gas, so that molecules with stable chemical properties can be activated under near-environmental conditions. This property is particularly valuable for the conversion of highly inert molecules such as CO_2, N_2 and CH_4, because these molecules are usually difficult to activate by traditional means [5]. In the plasma catalytic system, the active species produced by the plasma can interact with the surface of the catalyst, and the catalyst can in turn affect the plasma environment, intermediate adsorption and product distribution. In addition, plasma treatment can change the surface defects, oxidation state and electronic structure of the catalyst at a relatively low temperature, thereby reducing the reaction energy barrier and promoting the synergistic enhancement of activity and selectivity. Due to these advantages, NTP processes have been explored for a wide range of applications, including CO_2 hydrogenation to chemicals/fuels, ammonia synthesis under mild conditions, dry reforming of methane, and hydrogen production. These technologies provide a promising route for renewable electric drive and distributed chemical manufacturing. However, despite substantial progress, energy efficiency remains a major obstacle to actual deployment. The core challenge is not only to achieve high reactant conversion or product yield, but also to maximise the proportion of electrical energy used for effective molecular activation and ultimately retained in the target chemical.

In this review, plasma-assisted CO_2 splitting and NTP-assisted ammonia synthesis are selected as two representative reaction systems for examining this challenge. CO_2 splitting ($CO_2 \rightarrow CO + 1/2O_2$) provides a well-defined platform for assessing the relationship between discharge characteristics, specific energy input, conversion, and thermodynamic energy efficiency. The CO produced is also an important raw material for the production of methanol, Fischer–Tropsch hydrocarbons and sustainable fuels based on syngas [6, 7]. At the same time, plasma-assisted ammonia synthesis represents a complementary case, in which the efficient activation of N_2 must be

DOI: 10.54254/2755-2721/2027.39136

coupled with selective surface hydrogenation, while inhibiting plasma-induced NH_3 decomposition. In view of the importance of NH_3 in fertilizer production and its potential role as a hydrocarbon-free carrier, its synthesis provides a second relevant benchmark for assessing how reactor design, discharge mode, catalyst properties and operating conditions determine energy utilisation [8, 9]. By comparing these two systems, this review aims to identify common principles for controlling energy efficiency in NTP processes and to emphasize strategies for improving energy transfer from electrical energy input to useful chemical products.

2. Plasma systems for CO_2 splitting

A variety of NTP reactor designs have been developed for CO_2 splitting, each employing different mechanisms of electrical energy deposition and molecular activation. Reactor configuration strongly influences the electron-energy distribution, gas temperature, discharge uniformity, residence time, and ultimately the balance between CO_2 conversion and energy efficiency trade-off. This section compares four representative systems, namely dielectric barrier discharge (DBD), DC glow-to-arc, direct-coupled microwave, and gliding arc plasmatron (GAP). For CO_2 splitting, energy efficiency (η) provides a more meaningful measure of process performance than conversion alone because it quantifies the fraction of electrical energy effectively stored as chemical energy in the reaction products, as defined in Equation (1).

$$\eta_{CO_2}(\%) = \frac{n_{CO_2,in} X_{CO_2} \times \Delta H_{CO_2}}{P_d} \times 100 \quad (1)$$

Here, $n_{CO_2,in}$ is the inlet molar flow rate of CO_2 (mol min^{-1}); X_{CO_2} is the CO_2 conversion (%); ΔH_{CO_2} is the reaction enthalpy for CO_2 splitting, approximately 280–283 kJ/mol, or about 2.9 eV per molecule, depending on the reference conditions adopted; P_d is the discharge power actually coupled to the plasma (kW).

DBD is one of the most widely studied plasma configurations for CO_2 conversion due to its simple structure, scalability and ability to operate at atmospheric pressure. In a typical DBD reactor, the alternating voltage is applied to two electrodes separated by the dielectric layer and the gas gap. The dielectric layer prevents arc formation and generates a large number of micro-discharges (filamentary discharges) that provide energetic electrons for CO_2 activation, as illustrated in Figure 1.

Uytdenhouwen et al. investigated an empty micro-gap DBD reactor with a gap distance of 455 μm [11]. Operating at 30 W discharge power, 1 bar, and with a pure CO_2 feed, the system achieved a remarkable CO_2 conversion of 53.6 ± 0.8% at residence times up to 75 s. The high conversion is close to the partial chemical equilibrium value, indicating that the very small gaps and long residence time can drive the DBD system far beyond the typical conversion levels. However, the energy efficiency is still in the range of 5–10%, which is a typical feature of the atmospheric-pressure DBD system, reflecting the significant energy loss caused by gas heating and filamentous inhomogeneity.

DOI: 10.54254/2755-2721/2027.39136

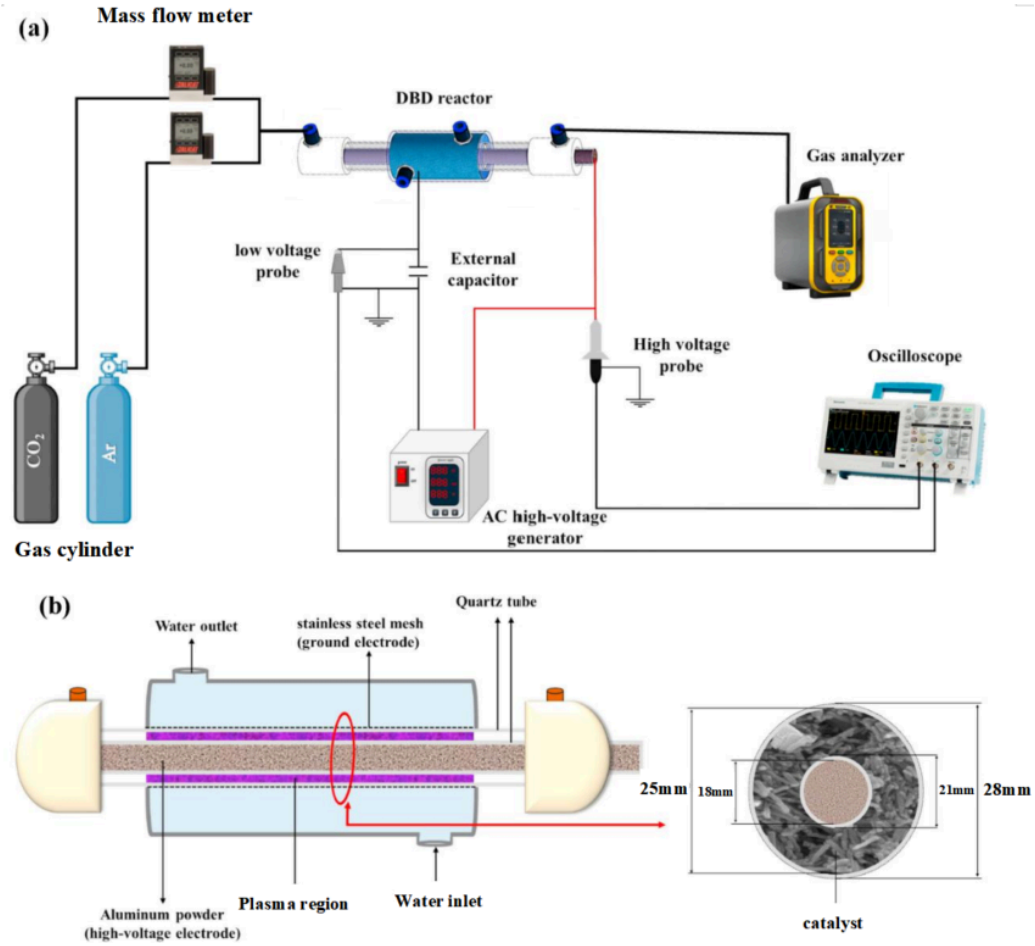

Figure 1. Schematic of the DBD plasma setup for CO_2 splitting (a) and the detailed cylindrical DBD reactor structure with catalyst packing (b) [adapted from Ref. [10] with permission. copyright 2024 Elsevier]

In order to improve energy efficiency and conversion, researchers have explored the coupling of DBD with catalysts and the use of diluted gases. A DBD reactor filled with MgO/HKUST-1 was developed, and the feed was diluted with argon (50 vol%CO_2 balanced with Ar) to enhance discharge [10]. At 74 W discharge power, 80 mL/min total feed flow, and atmospheric pressure with water cooling, the plasma–catalyst hybrid mode achieved a CO_2 conversion of 20.5%, compared with 12.3% in pure plasma mode. The maximum energy efficiency of the plasma–catalyst mode reached 6.7%, while the pure plasma mode could reach 9.3% at low specific energy input (SEI). These results illustrate the complex trade-off in the DBD system: the catalyst improves the conversion through surface reaction and adsorption, but at high power it may also change the discharge characteristics and reduce energy efficiency. Argon dilution helped Penning ionisation and improves discharge uniformity, further adjusting the conversion-energy efficiency balance.

The DC glow-to-arc reactor represents a hybrid discharge mode, working in the transition region between glow discharge and arc discharge. This region can generate stable non-equilibrium plasma with high electron density at atmospheric pressure, avoiding the filamentary discharge characteristics of DBD, while maintaining a lower gas temperature than the thermal arc. Renninger et al. developed an optimised DC glow-to-arc reactor (version 2) for CO_2 splitting at atmospheric pressure [12]. The reactor employed a pin-and-ring electrode configuration with an axial magnetic

DOI: 10.54254/2755-2721/2027.39136

field B = 30 mT, a zirconium oxide (ZrO_2) packed bed, and a choke inductance of L = 3 H to stabilise the discharge. Under the maximum gas flow rate of 1.25 standard litre per minute (SLM), the reactor reached 27.4% CO_2 conversion, and the maximum conversion was 29%. The plasma energy efficiency reached 45%, while the overall system energy efficiency (including power loss) was 28%.

The axial magnetic field plays a key role in the system. It changes the electrical properties of the plasma, stabilises the discharge in the ring electrode plane, and increases the swept volume by forcing the discharge to rotate and sweep over a larger area. This rotational motion enhances gas-plasma contact and improves energy utilisation. The ZrO_2 packed bed further plays a role by providing CO_2 adsorption and reaction surface sites, while the choke inductance inhibits the transition to a complete thermal arc and maintains the non-equilibrium characteristics of the discharge.

Microwave (MW) plasma discharge is generated by electromagnetic coupling at gigahertz frequency (usually 2.45 GHz). Unlike DBD, MW plasma can operate in a filamentless volume mode, with high electron density and relatively uniform energy deposition, which makes it attractive for efficient CO_2 dissociation. Mitsingas et al. reported a direct-coupled atmospheric-pressure microwave plasma system (MPS) for CO_2 conversion [13]. The system used a 2.45 GHz microwave source, a coupling power of 90–150 W, a pure CO_2 flow of 4–20 SLM, and atmospheric pressure operation. Under the conditions of 150 W and 4 SLM feed, the maximum CO_2 conversion reached 9.0%. More impressively, the system exhibited an extremely high energy efficiency of 82% at low SEI (~0.1 eV/molecule) and 50% at maximum conversion conditions. The direct coupling design minimises the impedance mismatch and energy loss in the transmission line, and achieves efficient energy transfer to the plasma. The high efficiency at low SEI indicates that the MW plasma is particularly effective in utilising the vibrational excitation pathway, where the CO_2 molecule is activated by gradual vibrational energy accumulation rather than direct electron collision dissociation -- a mechanism that is essentially more energy-efficient.

GAP combines the characteristics of thermal plasma and NTP. It is generated by an arc formed between two divergent electrodes. The arc is driven by the airflow along the electrode gap and is elongated until extinguished and re-ignited. This cycle produces transient non-equilibrium plasma with high power density. The GAP with reverse vortex configuration was used to analyse the techno-economic and energy consumption of CO_2 conversion [7]. In the empty reactor configuration, the system achieved 9.65% CO_2 conversion and 29% energy efficiency under 835 W plasma power, 10 SLM pure CO_2 feed and atmospheric pressure. A significant enhancement was demonstrated by integrating an embedded carbon bed into the GAP reactor. At a reduced plasma power of 530 W with the same 10 SLM feed, the carbon-bed-equipped reactor achieved a CO_2 conversion of 12.6% and an energy efficiency of 45.4%. The carbon bed serves a dual function: it consumes the O_2 generated from CO_2 splitting, shifting the equilibrium toward higher conversion via Le Chatelier's principle, and it participates in the reverse Boudouard reaction, producing additional CO from the carbon bed itself.

Table 1. Comparison of performance and conditions of recent plasma-assisted CO_2 splitting systems

System	Conditions	CO_2 conversion (%)	Energy efficiency (%)	Reference
DBD empty micro-gap (455 μm)	30 W discharge power, 1 bar, pure CO_2 feed, residence time up to 75 s	53.6 ±0.8 (partial chemical equilibrium value)	~5–10 (typical range for atmospheric-pressure DBD)	[11]

DOI: 10.54254/2755-2721/2027.39136

Table 1. (continued)

DBD with MgO/HKUST-1 catalyst (Ardiluted feed)	74 W discharge power, 80 mL/min total feed flow, 50 vol% CO_2 balanced with Ar, atmospheric pressure, water-cooled reactor	20.5 (plasma–catalyst mode); 12.3 (pure plasma mode)	6.7 (maximum for plasma-catalyst mode; up to 9.3 for pure plasma at low SEI)	[10]
DC glow-to-arc reactor (v2)	Pin and ring electrode, atmospheric pressure, axial magnetic field B = 30 mT, zirconium oxide packed bed, choke inductance L = 3 H, the maximum gas flow of V = 1.25 SLM	The reactor reached a conversion ofX_{CO2} = 27.4%, with a maximum of 29%	η_{plasma} = 45%energy efficiency in the plasma or η_{system} = 28% for the whole system	[12]
Direct-coupled atmospheric MPS	2.45 GHz microwave source, 90–150 W coupled power, 4–20 SLM pure CO_2 flow, atmospheric pressure	9.0 (maximum at 150 W, 4 SLM feed)	82 (maximum at low SEI ~0.1 eV/molecule); 50 (at maximum conversion condition)	[13]
GAP empty reactor	Atmospheric pressure, 835 W plasma power, 10 SLM pure CO_2 feed, reverse vortex flow configuration	9.65	29	[7]
GAP with embedded carbon bed	Atmospheric pressure, 530 W plasma power, 10 SLM pure CO_2 feed, reverse vortex flow, integrated carbon bed for in-situ O_2 consumption and reverse Boudouard reaction	12.6	45.4	

Key performance parameters of the systems above are compared in Table 1, showing that reactor performance cannot be assessed from CO_2 conversion alone. High conversion in DBD systems is frequently obtained at the cost of high SEI and relatively low energy efficiency, whereas microwave and transitional glow/arc plasmas can access more favourable energy-utilisation regimes, although often at lower single-pass conversion. More importantly, modifications such as catalyst packing, inert-gas dilution, magnetic-field control, direct power coupling, and embedded carbon beds affect conversion and efficiency through fundamentally different mechanisms, i.e., surface adsorption, Penning ionisation, swept-volume enhancement, vibrational-ladder pumping and equilibrium shifting, respectively. Therefore, when evaluating the effect of the above modification methods, a unified system boundary should be adopted, which needs to include SEI, carbon dioxide treatment flux, product yield and, where possible, wall-plug energy consumption. It can be seen that the subsequent optimisation work should not only improve the plasma reactivity, but also use more input electric energy for effective molecular activation, and reduce the excitation loss, recombination loss, heat loss and power transmission loss as much as possible.

DOI: 10.54254/2755-2721/2027.39136

3. NTP-assisted ammonia synthesis: energy-efficiency considerations

Ammonia is essential for fertiliser production and is increasingly regarded as a hydrocarbon-free carrier. The traditional Haber–Bosch synthesis requires high temperature and high pressure, and is still highly energy-consuming [8, 9]. NTP provides a distributed alternative solution under near-environmental conditions, which can be directly coupled with renewable electricity. However, similar to the plasma CO_2 conversion, the key challenge is not only to achieve high NH_3 yield or N_2 conversion, but also to maximise the proportion of electrical energy for directed effective nitrogen activation and ammonia formation.

As summarised in Table 2, DBD is the most widely investigated configuration because of its simple design and atmospheric-pressure operation [9]. Nevertheless, conventional DBD systems often exhibit relatively low energy efficiencies. Patil et al. screened a series of γ-Al_2O_3-supported metal catalysts and identified 2 wt% Rh/γ-Al_2O_3 as the best-performing platinum-group-metal catalyst, producing 1.43 vol% NH_3 with an energy yield of 0.94 g NH_3 kWh^{-1} [14]. Interestingly, the optimum N_2/H_2 ratio differed markedly from the stoichiometric Haber–Bosch ratio, reflecting the different kinetics of plasma-phase activation, surface reactions, and NH_3 decomposition under NTP conditions. A substantial improvement in energy utilisation was reported by Kim et al. using pulsed DBD over Ru-Mg/γ-Al_2O_3. At 250 °C, an energy yield of 25.5 g NH_3 kWh^{-1} was achieved, with pulsed operation outperforming conventional AC excitation [15]. This result illustrates that energy yield depends not only on the magnitude of the electrical input but also on its temporal delivery. Pulsed excitation can alter the electron-energy distribution and discharge characteristics, potentially increasing the fraction of energy channelled into productive N_2 activation while suppressing non-productive gas heating. The strong dependence on catalyst promoter, following Mg > K > Cs > unpromoted Ru, further demonstrates that plasma excitation and catalyst chemistry should be optimised together.

Reactor geometry and packing materials provide another important means of controlling energy deposition. Gómez-Ramírez et al. employed lead zirconate titanate (PZT) ferroelectric packing in a planar DBD reactor, achieving 2.7% N_2 conversion and 0.9 g NH_3 kWh^{-1} [16]. Although the energy yield remained modest, the study demonstrated how dielectric properties can modify local electric fields and microdischarge behaviour. Xian et al. further developed a double-helix, double-dielectric DBD reactor that generated a more spatially distributed electric field [17]. With Ni/Al_2O_3, the system achieved an energy yield of 3.68 g NH_3 kWh^{-1} at 5.92 W. These studies highlight the importance of discharge uniformity and effective utilisation of the reactor volume rather than simply increasing applied power.

Catalyst design brings a unique additional challenge for plasma ammonia synthesis: catalysts should not only promote N_2 activation and hydrogenation, but also inhibit plasma-induced decomposition of NH_3 products. Wang et al. [18] proposed a mesoporous shielding strategy using Ni/MCM-41, as illustrated in Figure 2. Plasma-exposed Ni sites promoted nitrogen activation, while newly formed NH_3 could diffuse into the mesoporous region, where exposure to energetic plasma species was reduced. The resulting NH_3 yield exceeded 5% at 35 °C and atmospheric pressure. Although an energy-yield value was not reported, this concept is important because product decomposition represents a direct loss of both chemical yield and electrical energy.

Related improvements have been achieved through mesoporous confinement, defect engineering, and electronic-structure regulation. Ru/MCM-41 operated under low-pressure NTP reached an energy yield of 1.7 g NH_3 kWh^{-1} [19], while metal/MgAl layered double hydroxides containing oxygen vacancies achieved approximately 1.67–1.71 g NH_3 kWh^{-1} [20]. Co-modified boron-doped

DOI: 10.54254/2755-2721/2027.39136

carbon nitride delivered 2.09 g NH_3 kWh^{-1} at an SEI of 20.16 kJ L^{-1}, approximately 2.9 times that of plasma-only operation [21]. In these systems, mesoporous environments, oxygen vacancies, and electron-deficient sites were proposed to enhance N_2 adsorption and activation and improve the utilisation of plasma-generated reactive species.

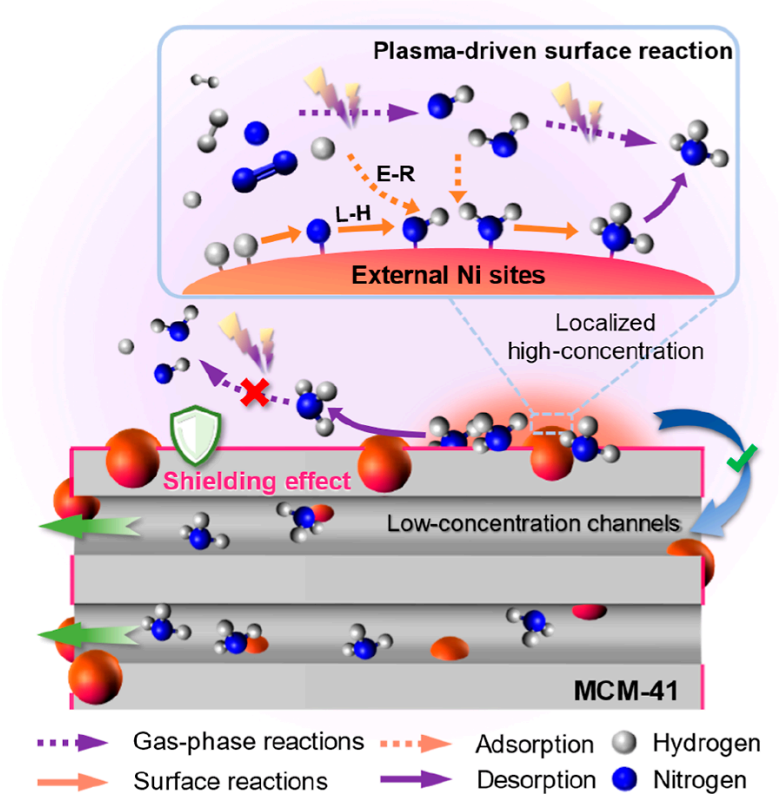

Figure 2. Proposed mechanism of the plasma-assisted surface reaction and the "shielding protection" effect of the mesoporous MCM-41-supported Ni catalyst for ambient NH_3 synthesis [adapted from Ref. [18] with permission. copyright 2022 American Chemical Society]

Overall, the studies in Table 2 indicate that the energy yield of plasma-assisted NH_3 synthesis is governed by the coupled optimisation of electron-energy deposition, discharge uniformity, catalyst-mediated N_2 activation, intermediate utilisation, and suppression of NH_3 decomposition. Importantly, an increase in NH_3 yield does not automatically imply improved energy yield; catalyst or reactor modifications must increase the fraction of electrical energy converted into useful chemical products. Direct comparison between reported values should also be treated cautiously. Energy yields in Table 2 range from below 1 to more than 25 g NH_3 kWh^{-1}, but the corresponding systems differ substantially in temperature, pressure, feed composition, SEI, discharge waveform, and reactor configuration. In particular, externally heated systems may report only plasma electrical consumption, while low-pressure reactors may exclude vacuum-pumping requirements. Therefore, plasma energy efficiency should be distinguished from overall process energy efficiency, and future benchmarking should report NH_3 production rate, energy yield, SEI, operating temperature and pressure, and auxiliary energy consumption on a consistent basis.

NTP-assisted ammonia synthesis has made significant progress in DBD reactor optimisation, mesoporous shielding catalysts, defect and acid engineering, and process parameter regulation. However, the current energy yield is still far below the practical target of about 45 g NH_3 kWh^{-1} [9].

DOI: 10.54254/2755-2721/2027.39136

Future work should focus on enhancing plasma–catalyst synergy, suppressing in-situ NH_3 decomposition, and promoting the scale of reactor design.

Table 2. Representative systems comparison

System	Conditions	NH_3 yield / rate	Energy yield (g NH_3 kWh^{-1})	Reference
DBD, Rh/γ-Al_2O_3	2 wt% Rh, N_2/H_2=1–2, atmospheric pressure	1.43 vol%	0.94	[14]
DBD, Ru-Mg/γ- Al_2O_3 (pulsed)	N_2:H_2=4:1, 250 °C	-	25.5	[15]
Planar DBD, PZT ferroelectric	PZT packing, N_2:H_2=1:3	2.7% N_2 conversion	0.9	[16]
Double-helix DBD, Ni/Al_2O_3	Double-helix electrode, 5.92 W	6.4 mmol g^{-1} h^{-1}	3.68	[17]
DBD, Ni/MCM-41 (shielding)	35 °C, 1 bar, 60 kJ L^{-1}	>5% NH_3 yield	-	[18]
Low-pressure NTP, Ru/MCM-41	5000 V, 26 kHz	~0.05%	1.7	[19]
DBD, metal/MgAl LDH	LDH with OV, atmospheric pressure	4.42–4.52 mmol g^{-1} h^{-1}	1.67–1.71	[20]
DBD, Co-BCN	20.16 kJ L^{-1}	~2.48 mmol g^{-1} h^{-1}	2.09	[21]

4. Conclusion and perspective

This review examines the energy efficiency of NTP processes using plasma-assisted CO_2 splitting and ammonia synthesis as two representative reaction systems. Across both cases, a common conclusion emerges, that is, conversion or product yield alone is insufficient to assess process performance. The more fundamental question is how effectively the supplied electrical energy is transferred through the plasma, coupled into productive molecular activation, and ultimately retained in the desired chemical products.

A major challenge is the lack of consistent energy accounting across different studies. In CO_2 splitting, a substantial difference can exist between the energy efficiency of the plasma itself and that of the overall system; for example, a DC glow-to-arc reactor achieved a plasma efficiency of 45%, whereas the corresponding system efficiency decreased to 28% when power losses were included [12]. Similarly, reported energy yields for plasma-assisted ammonia synthesis span more than an order of magnitude, from below 1 to above 25 g NH_3 kWh^{-1} [14, 15]. Such variations reflect not only differences in plasma and catalyst performance, but also differences in temperature, pressure, feed composition, SEI, discharge waveform, and the definition of the energy boundary. Meaningful cross-study comparison therefore requires standardised reporting that distinguishes plasma-level performance from whole-system energy consumption.

From an energy-flow perspective, electrical energy passes through several successive stages: power delivery, electron-energy deposition, molecular excitation and dissociation, surface reactions, and finally product formation. Energy losses can occur at each stage through impedance mismatch, non-productive excitation, vibrational relaxation, radical recombination, gas heating, and product decomposition. The representative studies discussed here show that improving one stage does not necessarily improve overall efficiency. For example, direct-coupled microwave plasma can achieve

DOI: 10.54254/2755-2721/2027.39136

very high energy efficiency at low SEI [13], consistent with favourable energy coupling into productive molecular excitation, whereas catalyst or packing addition in DBD systems may increase CO_2 conversion while reducing energy efficiency at higher power [10]. In ammonia synthesis, strategies such as mesoporous shielding and suppression of plasma-induced NH_3 decomposition improve energy utilisation by protecting products that have already been formed [18]. These observations emphasise that optimisation should focus on the entire energy-conversion pathway, rather than on maximising a single performance parameter.

Future development should therefore proceed in several directions. First, unified reporting protocols should include SEI, conversion or product yield, temperature, pressure, feed composition, discharge waveform, plasma power, and relevant auxiliary energy consumption. Second, the reactor optimisation should be guided by the full-chain energy audit to identify the main loss mechanisms under specific operating conditions. Third, the plasma source, reactor geometry, catalyst and product management strategies should be designed as an integrated system. Examples include deoxygenation in CO_2 conversion and confinement strategies to inhibit NH_3 decomposition. Finally, the techno-economic assessment should consider the value of the target product and downstream processing requirements, rather than relying on a single universal energy efficiency threshold. In general, the core challenge of plasma-assisted chemical processing is not only to produce more active species, but also to guide a larger proportion of input electrical energy to effective chemical reactions while minimising losses in the entire system. Establishing such a system-level perspective is critical for comparing different plasma technologies on a consistent basis and guiding them towards practical, energy-efficient chemical manufacturing.

References

[1] International Energy Agency. (2026). *Global energy review 2026*. https://www.iea.org/reports/global-energy-review-2026.

[2] Fang, S., Rahaman, M., Bharti, J., Reisner, E., Robert, M., Ozin, G. A., & Hu, Y. H. (2023). Photocatalytic CO_2 reduction. *Nature Reviews Methods Primers, 3*(1), 61.

[3] Bogaerts, A., Centi, G., Hessel, V., & Rebrov, E. (2025). Perspectives and emerging trends in plasma catalysis: Facing the challenge of chemical production electrification. *ChemCatChem, 17*(7), e202401938.

[4] Nozaki, T., Kim, D.-Y., & Chen, X. (2024). Plasma-enabled electrification of chemical processes toward decarbonization of society. *Japanese Journal of Applied Physics, 63*(3), 030101.

[5] Li, L., Chen, X., Hu, F., et al. (2025). Dielectric barrier discharge plasma catalysis for CO_2 conversion: Recent progress and perspectives. *Carbon Capture Science & Technology, 16*, 100485.

[6] Snoeckx, R., & Bogaerts, A. (2017). Plasma technology – A novel solution for CO_2 conversion? *Chemical Society Reviews, 46*(19), 5805–5863.

[7] Osorio-Tejada, J., Escriba-Gelonch, M., Vertongen, R., Bogaerts, A., & Hessel, V. (2024). CO_2 conversion to CO via plasma and electrolysis: A techno-economic and energy cost analysis. *Energy & Environmental Science, 17*(16), 5833–5853.

[8] Zhang, J., Li, X., Zheng, J., & Du, M. (2023). Non-thermal plasma-assisted ammonia production: A review. *Energy Conversion and Management, 293*(5), 117482.

[9] Zhang, Y., Niu, J., Chen, S., Chen, Y., Chen, H., & Fan, X. (2024). Ammonia synthesis by nonthermal plasma catalysis: A review on recent research progress. *Journal of Physics D: Applied Physics, 57*(32), 323001.

[10] Hatami, H., Khani, M., Rad, S. A. R., & Shokri, B. (2024). CO_2 conversion in a dielectric barrier discharge plasma by argon dilution over MgO/HKUST-1 catalyst using response surface methodology. *Heliyon, 10*(4), e26280.

[11] Uytdenhouwen, Y., Bal, K. M., Michielsen, I., Neyts, E. C., Meynen, V., Cool, P., & Bogaerts, A. (2019). How process parameters and packing materials tune chemical equilibrium and kinetics in plasma-based CO_2 conversion. *Chemical Engineering Journal, 372*, 1253–1264.

[12] Renninger, S., Stein, J., Lambarth, M., & Birke, K. P. (2022). An optimized reactor for CO_2 splitting in DC atmospheric pressure discharge. *Journal of CO2 Utilization, 58*, 101919.

DOI: 10.54254/2755-2721/2027.39136

[13] Mitsingas, C. M., Rajasegar, R., Hammack, S., Do, H., & Lee, T. (2016). High energy efficiency plasma conversion of CO_2 at atmospheric pressure using a direct-coupled microwave plasma system. *IEEE Transactions on Plasma Science, 44*(4), 651-656.
[14] Patil, B. S., Cherkasov, N., Srinath, N. V., Lang, J., Ibhadon, A. O., Wang, Q., & Hessel, V. (2021). The role of heterogeneous catalysts in the plasma-catalytic ammonia synthesis. *Catalysis Today, 362*, 2-10.
[15] Kim, H. H., Teramoto, Y., Ogata, A., Takagi, H., & Nanba, T. (2017). Atmospheric-pressure nonthermal plasma synthesis of ammonia over ruthenium catalysts. *Plasma Processes and Polymers, 14*(6), 1600157.
[16] Gómez-Ramírez, A., Cotrino, J., Lambert, R. M., & González-Elipe, A. R. (2015). Efficient synthesis of ammonia from N_2 and H_2 alone in a ferroelectric packed-bed DBD reactor. *Plasma Sources Science and Technology, 24*(6), 065011.
[17] Xian, S., Fu, X., Chen, S., Cao, L., Liu, T., Mu, Y., Fan, X., & Niu, J. (2026). Improving plasma-catalytic ammonia synthesis using a coaxial double-helix-electrode reactor. *ChemSusChem, 19*(7), e202502695.
[18] Wang, Y., Yang, W., Xu, S. et al. (2022). Shielding protection by mesoporous catalysts for improving plasma-catalytic ambient ammonia synthesis. *Journal of the American Chemical Society, 144*(27), 12020-12031.
[19] Peng, P., Cheng, Y., Hatzenbeller, R. et al. (2017). Ru-based multifunctional mesoporous catalyst for low-pressure and non-thermal plasma synthesis of ammonia. *International Journal of Hydrogen Energy, 42*(30), 19056–19066.
[20] Zhang, Y., Li, S., Qiu, B., Chen, S., Chen, H., & Fan, X. (2024). MgAl layered double hydroxide (LDH) for promoting ammonia synthesis in non-thermal plasma: Role of surface oxygen vacancy. *Chemical Engineering and Processing-Process Intensification, 195*, 109608.
[21] Bajpai, A., & Kumar, S. (2024). Tailoring the surface acidity of catalyst to enhance nonthermal plasma-assisted ammonia synthesis rates. *Molecular Catalysis, 557*, 113961.