Proceedings of CONF-MLA 2026 Symposium: Intelligent Systems and Automation: AI Models, IoT, and Robotic Algorithms
DOI: 10.54254/2755-2721/2026.LD38177

AI-Based PCB Micro-Defect Detection: A Conceptual Framework and Case-Based Validation

Yutian Gao

Montclair Kimberley Academy Upper School, Montclair, USA
gaograyson661@gmail.com

Abstract. Printed Circuit Boards (PCBs) are necessary parts of current electronic products, and surface defects can cause problems in the operation or lifespan of these devices. Traditional inspection methods are unable to find small defects, are easily affected by a cluttered background, and have low inspection efficiency. Therefore, deep learning and object detection technologies have been applied to automate the inspection of PCB defects. This paper investigates how artificial intelligence (AI) can be used to address the problems of detecting small defects on PCBs and builds a conceptual system that integrates the attributes of PCB defects with AI inspection technology. Based on the review of previous studies, this paper presents an all-encompassing system architecture for defect attributes, AI feature learning, defect detection and localisation, and performance evaluation; four representative case studies are used to verify the system's practicality. Based on the above results, using small-object detection, attention mechanisms, improved feature extraction methods and lightweight network architectures can improve both the detection accuracy and efficiency. In addition, all the above factors should be taken into account in the process of defect detection. A limitation of this study is that it is based on existing literature and case analyses without new experimental verification; in the future, further tests of the framework can be conducted using publicly available PCB defect datasets.

Keywords: PCB Defect Detection, Artificial Intelligence, Deep Learning, Object Detection, Machine Vision

1. Introduction

Printed Circuit Boards (PCBs) are necessary components of modern electronic devices that are widely used in the development of consumer electronics, industrial equipment, communication systems, etc [1]. Quality of PCB manufacturing directly affects the reliability and performance of electronic products. There are many kinds of defects in PCB production, such as short circuits, open circuits, missing holes, excess copper, spurs and mouse bites. Although some of these defects are only in a very small area of the PCB image, they may still lead to electrical and functional problems in the final product. Therefore, a high-efficiency, high-accuracy PCB defect inspection system is required for electronic manufacturing.

At present, PCB inspection is still done manually by observation, and sometimes optical or microscopic devices are used. Inspectors find defects by viewing PCB pictures or the real boards,

© 2026 The Authors. This is an open access article distributed under the terms of the Creative Commons Attribution License 4.0 (https://creativecommons.org/licenses/by/4.0/).

DOI: 10.54254/2755-2721/2026.LD38177

and use their experience and visual judgement [2]. Manual inspection is relatively slow and labour-intensive; thus, a large number of PCBs cannot be manually inspected. Repetitive inspection work causes fatigue and therefore leads to uneven judgment. In addition, many of the defects in PCBs are very small, and the complex visual patterns of circuit boards are also difficult to identify accurately. Therefore, new high-throughput, accurate and reliable automated detection technologies for small defects in PCBs need to be developed.

Artificial intelligence can be employed to solve the problems mentioned above. PCB defect inspection is naturally related to image analysis, and AI methods can learn visual patterns from image data. Deep learning can automatically learn representative features of PCB images to reduce the demand for manual design of inspection rules. YOLO is a kind of object detection model that can identify the type and location of defects, and is therefore suitable for the automated inspection of PCB defects [3]. There are strengths and weaknesses in all the methods of artificial intelligence; therefore, their applications to PCB micro-defect detection need to be systematically studied.

The aim of this paper is to investigate how artificial intelligence can be applied to solve practical problems in PCB micro-defect inspection, such as small defect sizes, complex image backgrounds, and the demand for high-efficiency automation of detection. This paper will introduce the existing artificial intelligence-based methods for PCB defect detection and propose a general framework that connects the characteristics of PCB defects with suitable AI-based detection techniques. The research results published previously will serve as cases for further investigation of the application of the new framework. Instead of carrying out a new model-training experiment, this study will combine the results of published research to provide a brief introduction to how AI-based methods can help with PCB micro-defect inspection and to point out some directions for future research.

2. Related work

2.1. Traditional PCB inspection

Traditional PCB defect inspection is based on manual visual inspection and optical equipment. Based on their experience and predefined inspection criteria, inspectors observe the surface of the PCB for irregularities [4]. Microscopes and other optical instruments can be used to observe relatively small defects. Manual inspection is relatively slow and labour-intensive; therefore, it is not feasible for a large number of PCBs. Fatigue of people and differences in their experiences can also lead to irregular inspection results. Therefore, some researchers have started to explore automated image-based methods for PCB defect inspection.

2.2. Image processing and machine learning techniques

The first way to automate the inspection of PCBs was to use older image-processing methods, such as greyscale conversion, thresholding, edge detection, morphological operations and template matching [2]. The above methods can find defects in images taken under ideal conditions, and the features of the defects are relatively consistent. However, the results of these rules and selected features are not very generalisable. Fluctuations in light, complex circuit patterns and variations among defect types can cause fixed rules to fail in reliable detection of all PCB images.

Machine-learning methods have been applied to improve the adaptability of the automated inspection system. Support Vector Machines (SVM), decision trees and other classifiers can be used to learn patterns from the extracted image features to classify PCB regions as defective or normal. Machine learning can be used to address the various visual patterns more flexibly than the previous

DOI: 10.54254/2755-2721/2026.LD38177

rule-based approach. However, the quality of manually designed features is required for most traditional machine learning methods. Thus, the feature extraction stage may not be suitable for representing the various types of PCB defects.

2.3. Deep learning-based PCB defect detection

Deep learning has been developed to address the problem of automated PCB defect inspection. Deep learning models can directly learn feature representations from the image data without traditional image processing and machine learning methods. Convolutional neural networks (CNNs) are commonly used today for image classification, and they can learn a hierarchy of visual features from the training data. Given the various shapes, sizes and visual features of defects in PCB inspection, deep learning can also be applied to this problem [5].

For the problem of defect detection, an object detection model can be used to find both the category and the location of the defect. Representative Detection Methods include Faster R-CNN, Single Shot MultiBox Detector (SSD) and the YOLO series. Among these ways, YOLO is designed for real-time object detection and can process an image to predict the location and type of several objects [6]. YOLO is a relatively high-performance and lightweight object detection model that has been widely applied in industrial inspection.

Recently, better models based on deep learning and YOLO have been used to detect defects in PCBs, and research has been conducted to address problems such as small-object detection, feature extraction, model efficiency and detection accuracy. Research has shown that deep learning is likely to improve the detection of PCB defects, but it is still challenging to find very small defects because they are difficult to distinguish from the background of the PCB. The first detection method was a rule-based one, and now many are machine learning models or deep learning models. However, most of the existing research has either optimised individual models or made minor improvements to specific datasets; little attention has been paid to how the features of PCB defects affect the selection of AI detection methods. Therefore, this paper proposes a conceptual framework for the integration of the engineering characteristics of minute PCB defects and AI detection technology, and explores and validates the application of this framework based on previous research.

3. Conceptual framework

Based on the engineering problems identified in PCB inspection and the results of previous studies, this paper proposes a concept for AI-based micro-defect detection in PCBs. The framework is to establish an explicit link among the attributes of PCB defects, the selection of AI-based detection methods, and the desired inspection results. Instead of using a single AI model, the framework regards PCB defect detection as a process in which the attributes of the inspection problem affect the technical demands of the detection method.

As shown in Figure 1, the three main problems of PCB micro-defect inspection are: small defect size, complex visual background, and the need for high-efficiency inspection. The small defects are not very noticeable, and it is difficult to distinguish them from the surrounding circuit pattern. At the same time, the complex structure and texture of PCB images are also harder to inspect for defects accurately. Detection systems in actual manufacturing environments also need to be relatively accurate and fast in processing. Therefore, the AI-based inspection method should have the ability to learn fine visual characteristics, separate defects from a cluttered background, and achieve high accuracy and efficiency in detection.

DOI: 10.54254/2755-2721/2026.LD38177

Deep learning offers one of the main technical supports for these demands by learning hierarchical visual features from image data automatically. YOLO is a type of object detection model that can identify both the type and position of defects; thus, it is suitable for automatic PCB inspection. Based on the particular demands of inspection, different model optimisation techniques can be employed, such as attention mechanisms, small-object detection structures and lightweight network designs.

Therefore, the four links in the above framework are: PCB defect characteristics → AI-based feature learning → defect detection and localisation → inspection performance evaluation. First of all, the size, shape and other visual characteristics of the PCB defects are considered. The second stage introduces the training of an AI model for PCB images. The third stage is to identify defect types and positions of defects. Finally, representative indicators of inspection performance are used, such as Precision, Recall, F1 Score and detection speed. The framework provides an organised basis for investigating how the current AI-based methods can address the practical problems of PCB micro-defect inspection, and will also guide the case-based validation introduced in the following section.

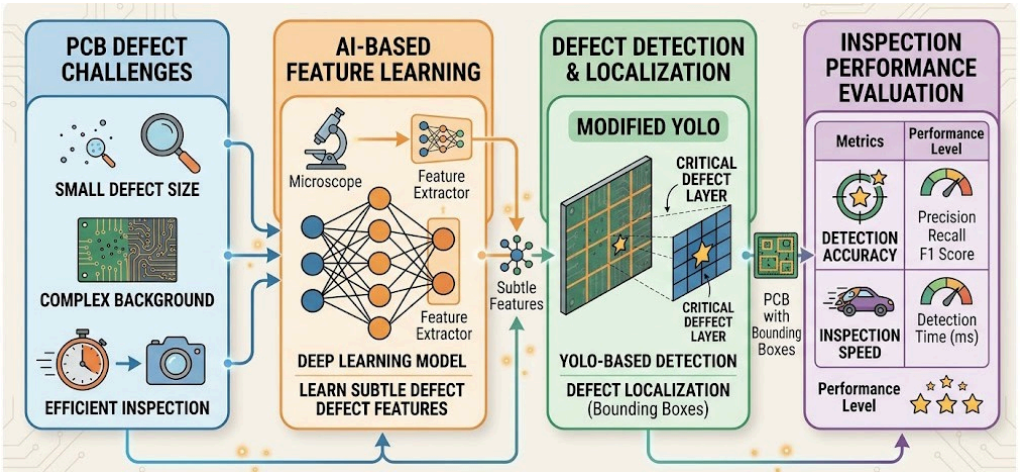

Figure 1. Conceptual framework for AI-based PCB micro-defect detection

4. Case-based validation

To investigate the applicability of the proposed conceptual framework, four representative studies on AI-based PCB defect detection will be taken as case studies. The selected studies have different practical needs, such as small-defect detection, detection efficiency, model optimisation and general development of machine vision-based PCB inspection.

4.1. AI-based detection of small and complex PCB defects

Gao etal. presented an improved YOLOv5_ES model for PCB surface defect detection that addresses the problem of small-sized defects and complex image backgrounds [7]. A light-weight small-object detection structure was proposed, and spatial pyramid dilated convolution and an efficient multi-scale attention mechanism in the model were introduced. Therefore, the detection performance has been improved and both the number of parameters and computation have decreased. This case directly corresponds to the first part of the proposed framework, and due to the small size of PCB defects, the design of feature extraction and detection structures is also affected.

DOI: 10.54254/2755-2721/2026.LD38177

Therefore, the study has shown that adapting AI models to the visual features of PCB defects is necessary.

Shen et al. have also applied YOLOv5-based object detection to the problem of printed circuit board assembly defect inspection. They have built and tested an improved detection method based on a PCBA defect dataset, and shown better performance than the original YOLOv5 and several other existing methods [8]. Research has been conducted to detect various kinds of defects in PCBA images, and object detection models have shown good results in handling the complex visual features of assembled circuit boards. YOLOv5 is a type of object detection algorithm that, instead of manually designing features and inspection rules as older image-processing methods do, learns visual representations directly from the training data to find the location of defects automatically. It is necessary to classify the defects and precisely locate them in the PCB for effective PCB inspection. Therefore, it is necessary to consider the characteristics of the dataset when designing a model architecture, as changes in defect size, appearance and background may affect detection results. Therefore, this case offers additional support for the application of deep learning-based object detection in automated PCB inspection and highlights the necessity of selecting and optimising models according to specific inspection requirements.

4.2. Detection accuracy and computational efficiency

Xiao et al. based on YOLOv7-tiny to develop the CDI-YOLO algorithm for more accurate and fast PCB defect detection [9]. To address the six typical types of surface defects, including missing holes, mouse bites, open circuits, shorts, spurs, and spurious copper (Figure 2), coordinate attention, depthwise separable convolution, and an improved bounding box regression loss were added to the network.According to the experiment, the mAP of this model is 0.983 and it has a detection speed of 128 FPS for the small model. As shown in the above case study, the evaluation stage of the proposed framework is effective and model optimisation has met both the accuracy and speed requirements for PCB inspection. Balance the accuracy of detection with the computational cost in the performance assessment.

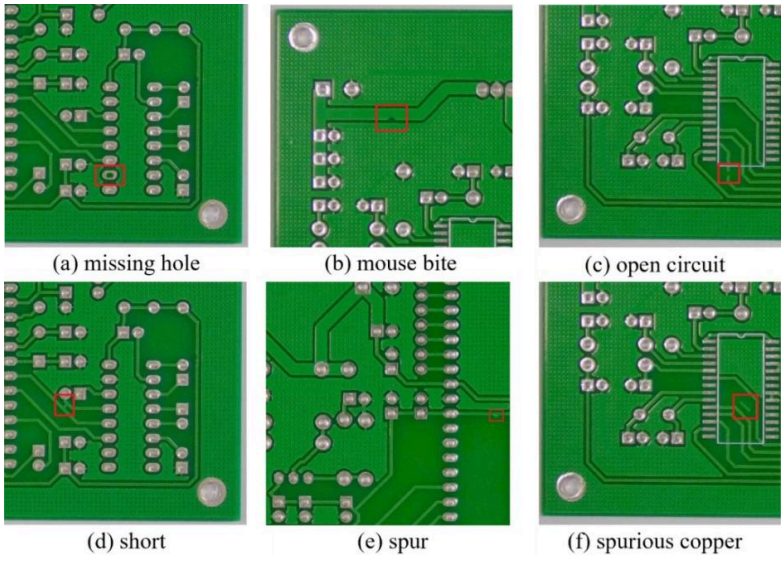

Figure 2. Six different PCB defects

DOI: 10.54254/2755-2721/2026.LD38177

He et al. conducted an extended review of machine vision-based PCB surface defect detection and categorized the existing approaches into image processing, machine learning, and deep learning. Other studies have also introduced CNN- and Transformer-based methods, public datasets, evaluation indicators, micro-defect detection, computational cost and industrial applications. Based on the above evidence, the entire system of PCB defect detection is relatively complicated and has many factors, such as defect attributes, model selection, detection accuracy, etc [10].

The four cases offer the initial support for the proposed conceptual framework. Based on the above studies, the features and detection requirements for PCB defects have changed; therefore, new model architectures and optimizers have been developed to improve accuracy, localisation and computational efficiency. Therefore, the framework offers an organised foundation for understanding how to choose and evaluate AI-based methods of PCB micro-defect inspection.

5. Conclusion

This paper investigates the application of AI-based methods for PCB micro-defect detection and constructs a conceptual framework that links PCB defect characteristics with suitable AI-based detection approaches. The main engineering problems of small defect size, complex visual backgrounds, and the demand for high-efficiency inspection are linked by an AI-based feature learning, defect detection and localisation, and performance evaluation framework. The above system can provide a general direction for grasping how the actual situation of PCB defects relates to the demands for automated inspection.

Case-based analysis of the four representative studies provides the foundation for the proposed framework. Based on the studies mentioned above, improved YOLO-based models of deep learning object detection have shown various applications in different PCB inspection scenarios. To enhance the detection accuracy and reduce computational cost, small-object detection structures, attention mechanisms, improved feature extraction and lightweight network design techniques have been proposed. Based on the above evidence, the performance of PCB inspection cannot be assessed solely by accuracy. Other requirements for the application of a model include its localisation ability, model complexity, detection speed and features of the inspection data.

Therefore, the main contribution of this paper is to provide a short system that connects engineering problems with AI-based detection strategies and performance evaluation. Instead of focusing on improving a single detection model, this study offers more general ideas for addressing all kinds of problems in PCB inspection with various AI technologies. However, the research is limited to the use of previous studies and case analyses; no new experiments have been conducted. Future research can verify the proposed framework by conducting controlled experiments on public PCB defect datasets under uniform evaluation conditions. Further work can also explore lightweight models, real-time detection and deployment in a realistic industrial environment to provide stronger support for the application of AI-based PCB micro-defect inspection.

References

[1] Kaya, M. (2019). Printed circuit boards (PCBs). In Electronic waste and printed circuit board recycling technologies (pp. 33-57). Cham: Springer International Publishing.

[2] Houdek, C., & Design, C. (2016). Inspection and testing methods for PCBs: An overview. Engineer/OwnerCaltronics Design & Assembly, 401, 1-7.

[3] Yuan, M., Zhou, Y., Ren, X., Zhi, H., Zhang, J., & Chen, H. (2024). YOLO-HMC: An improved method for PCB surface defect detection. IEEE Transactions on Instrumentation and Measurement, 73, 1-11.

DOI: 10.54254/2755-2721/2026.LD38177

[4] Petkov, N., & Ivanova, M. (2024). Printed circuit board and printed circuit board assembly methods for testing and visual inspection: a review. Bulletin of Electrical Engineering and Informatics, 13(4), 2566-2585.
[5] Ling, Q., & Isa, N. A. M. (2023). Printed circuit board defect detection methods based on image processing, machine learning and deep learning: A survey. IEEE Access, 11, 15921-15944.
[6] Aboyomi, D. D., & Daniel, C. (2023). A comparative analysis of modern object detection algorithms: YOLO vs. SSD vs. faster R-CNN. ITEJ (Information Technology Engineering Journals), 8(2), 96-106.
[7] Gao, Y., Li, Z., Wang, Y., & Zhu, S. (2024). A novel YOLOv5_ES based on lightweight small object detection head for PCB surface defect detection. Scientific Reports, 14, 23650.
[8] Xiao, G., Hou, S., & Zhou, H. (2024). PCB defect detection algorithm based on CDI-YOLO. Scientific Reports, 14, 7351.
[9] Shen, J., et al. (2024). Defect detection of printed circuit board assembly based on YOLOv5. Scientific Reports, 14.
[10] He, Z., Lian, Y., Wang, Y., & Lü, Z. (2025). A comprehensive review of research on surface defect detection of PCBs based on machine vision. Results in Engineering, 27, 106437.