Proceedings of CONF-FMCE 2026 Symposium: Smart City and Infrastructure Engineering
DOI: 10.54254/2755-2721/2026.CH37826

Preparation of Nickel Ferrite Materials and Investigation of Their Supercapacitor Performance

Ruoxin Li

College of Chemistry and Chemical Engineering, Central South University, Changsha, China
2986343172@qq.com

Abstract. In view of the global energy crisis and environmental deterioration, the global energy transition, and China's strategic objectives of achieving "dual carbon" goals, the development of high-performance energy storage devices is the key to realizing the low-carbon development of the energy structure. Supercapacitors, with a lot of advantages such as high power density, fast charge-discharge rates, and long cycle life, are ideal candidates for applications in electric vehicles and smart grids.However, their actual electrochemical performance is still greatly constrained by the physicochemical properties of electrode materials. At the material level, nickel ferrite itself possesses a high theoretical specific capacitance, excellent redox properties, abundant active sites, good conductivity, and structural stability, making it likely to be one of the preferred options for future electrode materials. This paper provides theoretical and technical references for the preparation and design of nickel ferrite materials, as well as their performance manifestation and practical applications in supercapacitors.

Keywords: nickel ferrite, supercapacitor, electrode material

1. Introduction

The global energy crisis and environmental degradation have driven China's transition toward low-carbon energy systems to achieve "dual carbon" goals, making new energy storage devices essential. Supercapacitors bridge conventional capacitors and batteries by combining rapid charge–discharge with high energy storage, showing great promise in electric vehicles, smart grids, and portable electronics [1]. Nickel ferrite ($NiFe_2O_4$) is a promising electrode material due to its high theoretical capacitance, excellent redox activity, good conductivity, and structural stability. Optimizing electrode materials for large surface area, high conductivity, and stability can effectively improve supercapacitor performance [2]. While carbon-based materials dominate the market, they fall short of modern demands for capacitance and energy density. Nickel ferrite offers higher energy density and redox activity, making it a preferred choice for high-performance electrodes [3]. This review covers supercapacitor fundamentals, $NiFe_2O_4$ synthesis methods (solid-state, co-precipitation, sol-gel, solvothermal, microwave-assisted, spray pyrolysis), and material morphologies. It also summarizes electrochemical performance of $NiFe_2O_4$ in various forms, highlighting that nano-design, doping, and carbon/metal hybrids significantly boost capacitance and cycling stability,

© 2026 The Authors. This is an open access article distributed under the terms of the Creative Commons Attribution License 4.0 (https://creativecommons.org/licenses/by/4.0/).

DOI: 10.54254/2755-2721/2026.CH37826

enabling higher energy/power densities in asymmetric supercapacitors. This work provides theoretical and technical guidance for developing advanced $NiFe_2O_4$-based energy storage materials.

2. Supercapacitor and its device

Supercapacitors, also known as electrochemical capacitors or ultracapacitors, are a new class of energy storage devices that combine the rapid charge–discharge capability of conventional capacitors with the high energy storage capacity of batteries, bridging the gap between traditional capacitors and rechargeable batteries.Unlike batteries, supercapacitors store energy through non-faradaic or faradaic processes at the electrode/electrolyte interface without undergoing bulk chemical reactions, thereby enabling fast charging, long cycle life, high power output, and reliable safety.

2.1. Introduction to supercapacitors

By integrating the instantaneous response of conventional capacitors with high-capacity energy storage, supercapacitors serve as a key component in modern green energy systems [1]. Improving the energy density and efficiency of supercapacitors therefore keeps this field at the center of energy storage research.Mechanistically, supercapacitors avoid slow chemical reactions and instead store energy via static charge or rapid redox processes at the electrode/electrolyte interface, which enables fast charging and discharging.Supercapacitors are typically optimized for higher energy density and efficiency [4]. The electrode material serves as the decisive factor in determining supercapacitor performance.Future supercapacitors aim to achieve higher energy density through novel materials and structures, enabling applications in flexible electronics, electric vehicles, and hybrid storage systems. Exploratory approaches such as magnetic field assistance may further advance high-power, high-capacity, and durable energy storage solutions [5].

2.2. Energy storage device of supercapacitors

The composition of a supercapacitor mainly includes four parts: electrode materials, electrolyte, separator, and current collector. Among them, the performance of the supercapacitor is directly determined by the activity of the electrode materials and electrolyte. To prepare high-performance supercapacitors, we need electrode materials with high electrical conductivity, short ion paths, and sufficient electrochemical activity [4-6]. Its structure is roughly shown in Figure 1.

(1)Electrode materials: The materials discussed should be the core components of the supercapacitor and have decisive implications for the capacitor's energy storage form and electrochemical properties (specific capacitance, power, cycle life,etc.). Generally, electrode materials should be coated on current collectors and possess excellent conductivity, a large specific surface area, and stable electrochemical behavior. From the perspective of energy storage mechanisms, they can be roughly divided into: (a) Carbon-based materials: such as activated carbon, carbon nanotubes, graphene,etc., mainly based on the electric double-layer capacitance mechanism, with excellent cycling stability [7]. (b)Transition metal compounds: such as nickel ferrite ($NiFe_2O_4$) and nickel cobaltate, which utilize pseudocapacitance or hybrid mechanisms to achieve high energy density [2].(c)Conductive polymer materials (polyaniline, polypyrrole): also belong to the pseudocapacitor system.

(2)The ion-conductive electrolyte used in capacitors is a fundamental component, and specifications must also be made regarding operating voltage, internal resistance, temperature, and

DOI: 10.54254/2755-2721/2026.CH37826

safety. Ideally, the electrolyte should possess advantages such as high ionic conductivity, good thermal performance, compatibility with electrode materials, and safety characteristics (non-toxic, non-flammable, non-explosive) [8]. According to physicochemical properties, there are the following types: (a) Aqueous electrolytes (such as KOH, H_2SO_4): excellent ionic conductivity, but a narrow voltage window. (b) Organic electrolytes: allow a wider voltage range, but conductivity is limited. (c) Ionic liquids: wide voltage window and strong safety. (d) Solid/quasi-solid electrolytes: suitable for flexible, wearable devices, capable of conducting ions while serving as a separator, and do not leak [4, 9].

(3)Current Collector: The current collector serves as a passive structural support that electrically bridges the electrode active material to the external circuit while dissipating operational heat, typically using conductive metal foils, foams, or meshes with low contact resistance [4].

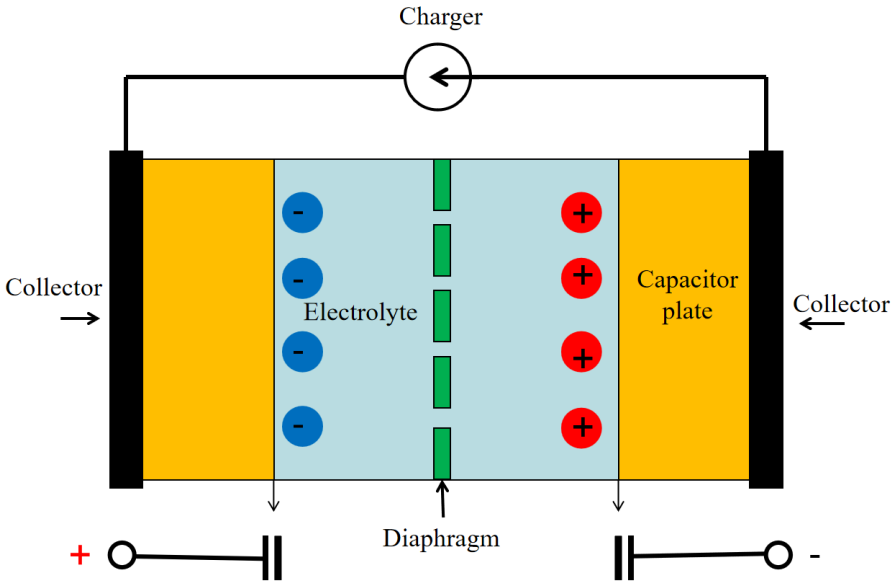

Figure 1. Schematic diagram of supercapacitor

(4)Separator: The separator physically isolates the positive and negative electrodes to prevent short circuits while permitting ionic transport through its porous architecture, commonly employing glass fiber, polypropylene, or cellulose-based materials with mechanical and electrochemical stability [4].

3. The components, conductive mechanism and energy storage principles in supercapacitor devices

The basic components used in supercapacitors are high specific surface area electrodes, ionic conductor electrolytes, and insulating separators. From the perspective of conductivity, charges are physically separated: after an external voltage is applied, ions of opposite charge begin to adsorb onto the electrode surface, while charges caused by the movement of electrons in the electrode appear in a reverse manner. Both types of charges coexist at the interface, thereby achieving the physical storage of charge. The energy storage follows the classical capacitor formula $E = 1/2\ CV^2$. At this point, the type of electrolyte already determines the maximum withstand voltage, which in turn limits the upper bound of energy storage, thus allowing an appropriate combination of high power density and rapid charge-discharge characteristics.According to different energy storage

DOI: 10.54254/2755-2721/2026.CH37826

mechanisms, supercapacitors are mainly divided into the following three types of energy storage mechanisms:(1) Electric Double-Layer Capacitance Mechanism(EDLC): The method uses electrostatic effects to store charge in the form of a double layer at the electrode-electrolyte interface. This is a purely physical phenomenon with no chemical reaction components. Carbon-based materials(such as activated carbon, carbon nanotubes, graphene) are most commonly used in double-layer capacitor electrodes due to their large specific surface area and excellent conductivity. (2) Pseudocapacitance mechanism: This refers to using the rapid and reversible Faradaic redox processes on the electrode surface or in its adjacent region as a means of energy storage. The resulting capacitance is much higher than that of double-layer types. Known pseudocapacitive materials include transition metal oxides (RuO2, MnO2) and conductive polymers(polyaniline, polypyrrole) [4]. (3) Hybrid Mechanism: It simultaneously utilizes the advantages of both electric double layers and pseudocapacitance. In design, different types of electrodes (such as carbon-based and metal oxides) can be combined to achieve high power and high energy density [2]. Currently, discussions on electrode materials focus on several types of substances: carbon-based materials, transition metal compounds, conductive polymers, and newer materials(such as MXenes or MOFs, which will be the focus of future research on supercapacitor performance [4]). EDLC stores electricity based on the principle of electrostatic adsorption, featuring high power and extremely long cycle life, but with limited energy density; pseudocapacitors obtain charge through rapid surface reactions, offering higher specific capacitance and good stability; hybrid types combine both, typically pairing an EDLC electrode with a pseudocapacitor or hybrid electrode, simultaneously meeting the requirements for high power and high energy, and are currently a research hotspot [9]. According to their structure, energy storage method, and capacitor materials, supercapacitors can be categorized into double-layer capacitors, pseudocapacitors, or hybrid capacitors [10].

3.1. Double-layer conductive mechanism and energy storage principles

(1) Conductive Mechanism: The EDLC involves a conductive mechanism based on physical electrostatics. If the electrode is placed in an electrolyte solution and a certain voltage is applied, the charges on the electrode surface will attract ions of the opposite charge in the electrolyte through electrostatic interaction, forming a densely packed double layer at the electrode-electrolyte interface [4].

(2) Energy Storage Principle: The fundamental energy storage method on which a double-layer capacitor relies is the storage and separation of charge through electrostatic means.During charging, an external voltage drives electrons through the external circuit while electrolyte ions migrate toward opposite electrodes, forming an electric double layer at the electrode/electrolyte interface. This EDLC acts as a microscopic capacitor that stores charge electrostatically. Upon discharge, electrons flow back through the circuit and ions diffuse into the bulk electrolyte, releasing the stored energy. In essence, EDLC energy storage relies solely on electrostatic adsorption of ions without involving chemical reactions, which endows supercapacitors with high reversibility and rapid charge/discharge rates [11]. The specific energy storage principle of the double-layer capacitor is shown in Figure 2.

DOI: 10.54254/2755-2721/2026.CH37826

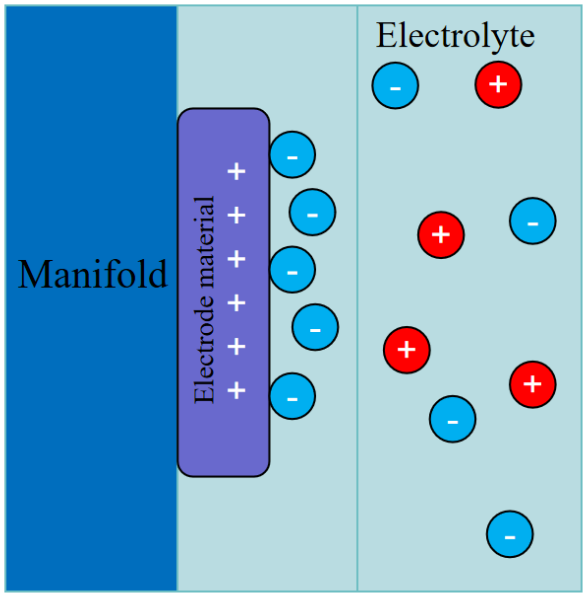

Figure 2. Schematic diagram of double-layer energy storage

3.2. Pseudocapacitive conduction mechanism and energy storage principle

(1) Conduction mechanism: The rapid and reversible redox reactions on the Faraday surface or near-surface electrode material are used for energy storage. The electron transfer referred to here is the Faraday phenomenon, where the reaction itself is rapid and occurs only on the material surface [7].

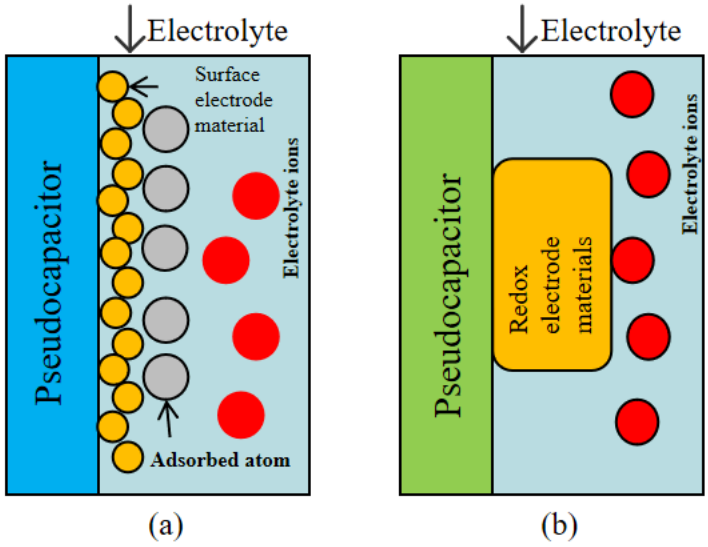

Figure 3. Schematic diagram of supercapacitor energy storage [13]

(2) Energy storage principle: The discussion in the text concerns Faradaic redox phenomena based on diffusion. From a practical perspective, the electrode materials used should be able to support fast and reversible redox reactions on their surface or in adjacent regions (such as the charge storage process). Unlike electric double-layer capacitors (EDLC), which rely solely on electrostatic

DOI: 10.54254/2755-2721/2026.CH37826

adsorption, pseudocapacitance operates via an electron-transfer mechanism, which significantly aids both energy density and discharge duration [5, 12]. Oxides and conductive polymers are generally considered pseudocapacitive materials. They rapidly accumulate or release charge through electron transfer and the insertion/extraction of ions. The principle of pseudocapacitive energy storage is illustrated in Figure 3.

3.3. Mixed conductive mechanisms and energy storage principles

(1) Conductive Mechanism: The active substances in the electrode material undergo bulk Faradaic redox reactions.

(2) Energy Storage Principle: The active materials used in the electrode undergo Faradaic redox reactions in bulk form. At this time, electrolyte ions generally enter or leave the material lattice in a certain manner, diffuse, or even induce phase changes. From an energy perspective, this mechanism can provide a larger capacity than conventional pseudocapacitors, but the process occurs in bulk (or is related to phase changes), and therefore the rate is not fast, making its adaptability to high-rate performance and long-term cycling often inferior to the first two methods.

4. Preparation methods of nickel ferrite materials

$NiFe_2O_4$ is a bimetallic oxide belonging to the spinel class, and both contained metals can contribute to pseudocapacitive or battery-type charge storage, which is beneficial for high-energy and high-power operation. Systems composed of bimetals are favorable for various redox processes, thus exhibiting superior electrochemical performance [2]. There are various methods for preparing nickel ferrite ($NiFe_2O_4$), and different synthesis methods have significant effects on the material's morphology, specific surface area, and electrochemical properties.These six principal synthesis routes for $NiFe_2O_4$ are compared in Table 1, including solid-state, co-precipitation, sol-gel, solvothermal, microwave-assisted, and spray pyrolysis methods. Solid-state and spray pyrolysis are favorable for large-scale production but yield relatively coarse particles. In contrast, wet-chemical routes such as co-precipitation and sol-gel offer better control over purity, particle size, and morphology, though they involve longer processing times or waste treatment. Solvothermal and microwave-assisted methods can produce high-quality nanocrystals with uniform size, but their scalability remains limited. Among these, sol-gel and solvothermal methods are most widely adopted for preparing nanostructured $NiFe_2O_4$ electrodes due to their ability to tailor composition and specific surface area.

Table 1. Preparation methods of nickel ferrite materials

Number	Preparation method	Basic principles	Advantage	Disadvantage	Product features	References
1	Solid-state reaction method	Mix and grind solid precursors (such as NiO and Fe_2O_3), then carry out high-temperature calcination and sintering	Easy to operate, low cost, suitable for mass production	Slow kinetics, high energy consumption, larger product particles, and difficult precise control of morphology	The particles are coarse, and the morphology is poorly controllable.	[2, 14, 15]

DOI: 10.54254/2755-2721/2026.CH37826

Table 1. (continued)

2	Co-precipitation method	Dissolve Ni/Fe salts, precipitate hydroxides with base, calcine to obtain nanoparticles.	High product purity, uniformparticles, scalable	pH-sensitive and temperature is required to prevent aggregation and the generation of waste liquid.	Nanoparticles with high purity and uniform particle size	
3	Sol-gel method	The precursor undergoes hydrolysis to form a sol, condenses into a gel, and is then dried and calcined to obtain crystalline $NiFe_2O_4$	High purity, uniform, precisely controlled composition, small particle size, large surface area	Time-consuming and costly	Small particle size, large specific surface area, and high uniformity	
4	Solvothermal method	In a sealed high-pressure reactor, the precursor reacts under a certain temperature and pressure.	Controlled size, crystallinity, and morphology produce high-quality products	High-pressure equipment is required, and the conditions are relatively stringent.	Spinel structure with high crystallinity and uniform purity	[2, 14, 15]
5	Microwave-assisted method	Use microwave radiation to directly heat the precursor solution, accelerating the reaction	Fast, energy-efficient, with high crystallinity and uniform particlesize	Poor scalability, not easily promotable	High crystallinity and uniform particle size	
6	Spray pyrolysis method	Rapid heating ofatomized precursor causes evaporation, decomposition, solid-phase reactions.	Capable of continuous large-scale production	Specialized atomization equipment is required	Spherical spinel particles	

5. Study on the performance of nickel ferrite materials for supercapacitors

The high theoretical capacitance, excellent redox properties, and structural stability of nickel ferrite make it a strong candidate material for supercapacitor electrodes. However, its actual performance is greatly influenced by the morphology of the material, nanostructure, synthesis process, and even its composite with other materials. The specific capacitance obtained by using $NiFe_2O_4$ nanoparticles alone is not very high.By adopting nanostructure designs , performing elemental doping, or combining highly conductive materials (rGO, graphene nanosheets) or certain metal compounds ($CoWO_4$, MXene), the electrochemical performance can be significantly improved.Under the circumstances, the specific capacitance of the $NiFe_2O_4$/rGO composite system is more than three times that of the pure material. $NiFe_2O_4$-based materials generally exhibit good cycling stability. For thousands to tens of thousands of charge-discharge cycles, the measured capacitance retention rate is basically between 80% and 95%, indicating good durability.Energy and power densities are often measured using the test results of complete asymmetric supercapacitors. Designing appropriate

DOI: 10.54254/2755-2721/2026.CH37826

electrodes (such as $NiFe_2O_4$@$CoWO_4$ heterostructures) helps achieve both high energy density and high power density, thereby offering broad application prospects. Despite the numerous achievements to date, $NiFe_2O_4$-based materials still face several challenges: their conductivity is not yet sufficiently strong, their rate performance is limited, and large-scale fabrication is difficult to accomplish.Addressing these issues will require hybrid structure designs, environmentally benign synthesis methods, and the development of flexible energy storage devices [2]. The specific data are shown in Table 2.

Table 2. Performance of nickel ferrite materials

Number	Material Category	Capacitance comparison	Cyclic stability (%)	Energy density (Wh/kg)	Power density (W/kg)	References
1	$NiFe_2O_4$ nanoparticles	199.6 F/g	98.0	6.93–27.71	1200–14490	[16]
2	$NiFe_2O_4$ nanofiber	1130 F/g	88	34.7	5314	[17]
3	$NiFe_2O_4$@MnO_2 core-shell structure	1391 F/g	88.6	45.2	174	[18]
4	$NiFe_2O_4$/rGO nanocomposite Materials	488–679.62 F/g	89.8-94	60.41-75	3910	[19]
5	$NiFe_2O_4$@$CoWO_4$ heterostructure	647.6 C/g	93	81.8	327	[20]
6	$NiFe_2O_4$@rGO Hydrogel	488 F/g	89.8	62.5	13500	[19]

6. Conclusion

This review covers the synthesis and electrochemical behavior of nickel ferrite ($NiFe_2O_4$) electrodes for supercapacitors. After a brief account of device structure and charge-storage mechanisms, we argue that the electrode material, more than any other component, sets the ceiling on overall performance.Synthesis is where much of that performance is decided. Solid-state and spray-pyrolysis routes scale well but are energy-intensive or equipment-heavy and tend to yield coarse particles; co-precipitation affords high purity at the cost of tight pH control; sol-gel gives uniform, high-surface-area products but is slow; solvothermal and microwave methods produce fine nanocrystals, yet the former needs high-pressure vessels and the latter resists scale-up. Whichever route is chosen, it fixes the particle size, morphology and surface area, and through them the electrochemical response.Pure $NiFe_2O_4$ is only a moderate performer. Nanostructuring, doping, and hybridization with conductive carbons (rGO, graphene, MXene) or with phases such as $CoWO_4$ raise both capacitance and cycling stability. $NiFe_2O_4$-based asymmetric devices have already reached energy densities competitive with commercial carbon systems, but conductivity, rate capability and scale-up remain the practical bottlenecks. Rational design of hybrid architectures, greener synthetic routes and flexible device formats look like the most productive directions.

References

[1] Aydın, G. (2026). Bridging performance and sustainability in supercapacitors: A review of advanced materials and synthesis strategies. *Journal of Energy Storage, 150*, 120234–120234. DOI:10.1016/J.EST.2025.120234.

[2] Askari, M. B., Salarizadeh, P., Tourchi Moghadam, M. T., et al. (2026). $NiFe_2O_4$ as a promising electrode material: A comprehensive review on supercapacitor applications. *Fuel, 403*, 136104–136104. DOI:10.1016/j.fuel.2025.136104.

[3] Xu, R., Chen, Z., Kou, J., et al. (2026). Balancing graphitization and defect density: N/S co-doped porous carbon from de-oiled camphor leaves for high-energy-density supercapacitors. *Journal of Energy Storage, 172*, 123035–

DOI: 10.54254/2755-2721/2026.CH37826

123035. DOI:10.1016/j.est.2026.123035.
[4] Czagany, M., Hompoth, S., Keshri, et al. (2024). Supercapacitors: An efficient way for energy storage application. *Materials, 702*, 38591562–38591562. DOI:10.3390/ma17030702.
[5] Sree Raj, K. A., Rout, C. S., et al. (2023). Recent developments, challenges and future prospects of magnetic field effects in supercapacitors. *Mater. Chem. A, 11*, 5495–5519. DOI:10.1039/d2ta09824e.
[6] Li, Y., Ai, X., Xie, Q., et al. (2026). Self-assembly of Ni2Mn1-Gly microspheres with bimetallic synergy for high-performance asymmetric supercapacitors. *Journal of Energy Storage, 152*, 120677. DOI:10.1016/j.est.2026.120677.
[7] Mannrich, K. D., Vanoni, C. R., Ferraria, A. M., et al. (2025). Expanded graphite functionalized by non-thermal plasma in aqueous medium applied to improve carbon-based supercapacitors. *Applied Surface Science, 713*, 164184. DOI:10.1016/j.apsusc.2025.164184.
[8] Jiang, X., Zhang, H., Qu, Y., et al. (2024). Engineering electrolyte strong-weak coupling effect toward wide-temperature supercapacitor. *Energy Storage Materials, 68*, 103374. DOI:10.1016/j.ensm.2024.103374.
[9] Wu, Q., He, T., Zhang, Y., et al. (2021). Cyclic stability of supercapacitors: Materials, energy storage mechanism, test methods, and device. *Mater. Chem. A, 43*, 24094–24147. DOI:10.1039/d1ta06815f.
[10] Dar, M. A., Majid, S. R., Satgunam, M., et al. (2024). Advancements in supercapacitor electrodes and perspectives for future energy storage technologies. *International Journal of Hydrogen Energy, 70*, 10–28. DOI:10.1016/j.ijhydene.2024.05.191.
[11] Jiang, L., Li, D., Xie, X., et al. (2023). Electric double layer design for Zn-based batteries. *Energy Storage Materials, 62*, 102932–102932. DOI:10.1016/j.ensm.2023.102932.
[12] Khan, S., Chand, S., Chakraborty, C., et al. (2025). Ultramicroporous Co(II)-squarate framework with Co4(μ3-OH)4 cubane structures: A pseudocapacitor electrode for advanced energy storage devices. *Chemical Engineering Journal, 516*, 164232–164232. DOI:10.1016/j.cej.2025.164232.
[13] Guan, X., Zhang, L., Li, X., et al. (2026). Design of lignin-derived elastic gradient-pore biocarbon with enhanced interfacial effects for supercapacitor applications. *Chemical Engineering Journal, 528*, 172270–172270. DOI:10.1016/J.CEJ.2025.172270.
[14] Islam, M., Ali, G., Jeong, M. G., et al. (2017). Study on the electrochemical reaction mechanism of $NiFe_2O_4$ as a high-performance anode for Li-ion batteries. *ACS Applied Materials & Interfaces, 9*, 11728–11737. DOI:10.1021/acsami.7b01892.
[15] Carpenter, G., Sen, R., Malviya, N., et al. (2015). Microwave-assisted synthesis and characterization of nickel ferrite nanoparticles. *AIP Conference Proceedings, 1665*, 120006–120006. DOI:10.1063/1.4929187.
[16] Arun, T., Kavinkumar, T., Udayabhaskar, R., et al. (2021). NiFe2O4 nanospheres with size-tunable magnetic and electrochemical properties for superior supercapacitor electrode performance. *Electrochimica Acta, 399*, 139346–139346. https://doi.org/10.1016/j.electacta.2021.139346
[17] Li, L., Lou, Z., Han, W., et al. (2016). Flexible in-plane microsupercapacitors with electrospun $NiFe_2O_4$ nanofibers for portable sensing applications. *Nanoscale, 8*, 14986–14991. https://doi.org/10.1039/c6nr04945a
[18] Zhang, X., Zhang, Z., Sun, S., et al. (2018). $NiFe_2O_4$@MnO_2 core–shell nanosheet arrays on Ni foam for high-performance asymmetric supercapacitors. *Dalton Trans, 47*, 2266–2273. https://doi.org/10.1039/c7dt04127f
[19] Zhang, X., Zhu, M., Ouyang, T., et al. (2019). $NiFe_2O_4$ nanocubes anchored on reduced graphene oxide cryogel to achieve a 1.8 V flexible solid-state symmetric supercapacitor. *Chemical Engineering Journal, 360*, 171–179. https://doi.org/10.1016/j.cej.2018.11.206
[20] Nasser, R., Zhang, L., Elhouichet, H., et al. (2024). Interfacial engineering of NiFe2O4@CoWO4 nanocomposite supported by Mott-Schottky junction for electrochemical energy storage. *Journal of Power Sources, 624*, 235522–235522. https://doi.org/10.1016/j.jpowsour.2024.235522