Proceedings of CONF-FMCE 2026 Symposium: Smart City and Infrastructure Engineering
DOI: 10.54254/2755-2721/2026.CH36864

Research Progress of Electrolyzer Technology in Green Hydrogen Production

Yuxuan Zhang

School of Vehicle and Transportation Engineering, Henan University of Science and Technology, Luoyang, China
luck2005zyx@gmail.com

Abstract. This paper analyzes the existing technologies of electrolyzers—the core equipment for green hydrogen production—and systematically reviews the state-of-the-art electrolyzer technologies used in alkaline water electrolysis, proton exchange membrane (PEM) electrolysis, anion exchange membrane (AEM) electrolysis, and solid oxide electrolysis.The article employed research methods such as classification and comparison of technical routes, analysis of key component structures, and summary of innovative designs, to conduct a systematic review of the principles, performance, design, and latest developments of the electrolytic cell.The current global energy transition towards a low-carbon model is driving the demand for green hydrogen. As the core equipment, the technology of electrolyzers determines the efficiency and cost of hydrogen production.Currently, the electrolysis cell technology is showing a diversified development pattern. Different types of electrolysis cells have their own advantages and disadvantages, and there are also innovative developments.The advancement of electrolyzer technology will determine the cost of green hydrogen and the key to the industrialization of hydrogen energy. Future research will focus on the development of electrolyzer structures and materials, among other aspects.

Keywords: Hydrogen fuel cell, Electrolysis water for hydrogen production, Electrolytic cell

1. Introduction

Hydrogen fuel cells achieve higher energy conversion efficiency than traditional internal combustion engines through electrochemical reactions, eliminating combustion and directly generating electricity via hydrogen-oxygen redox under catalysts. With over 60% efficiency (vs. ~30% thermal efficiency of internal combustion engines) and water as the only byproduct, they enable zero carbon emissions. For transportation, hydrogen fuel cell vehicles refuel in 3-5 minutes with over 600 km range, combining rapid refueling convenience with pollution-free operation.

The electrolyzer is critical for large-scale commercialization of hydrogen fuel cells. The key bottleneck for deployment is insufficient low-cost green hydrogen, and as the core of water electrolysis systems, electrolyzer performance directly determines green hydrogen cost and efficiency. Thus, electrolyzer technology advancement largely determines if hydrogen fuel cells can achieve economic viability and large-scale commercialization.

© 2026 The Authors. This is an open access article distributed under the terms of the Creative Commons Attribution License 4.0 (https://creativecommons.org/licenses/by/4.0/).

DOI: 10.54254/2755-2721/2026.CH36864

Electrolytic cells have complex internal structures, generally consisting of a tank body, anode, cathode, and diaphragm for electrode separation. Key components also include bipolar plates, electrode frames, electrodes, gaskets, and fasteners, with material and component designs varying across electrolyzer types.

Global electrolyzer technology is undergoing rapid iteration and competition. With strong policy support, China accounts for nearly 60% of global production capacity. Alkaline electrolyzers dominate market applications due to cost advantages, while proton exchange membrane (PEM) and anion exchange membrane (AEM) electrolyzers are developing rapidly. European countries continue investing in solid oxide electrolysis cell (SOEC) technology to further improve water electrolysis hydrogen production efficiency.

This paper systematically analyzes the working principles, performance, key components, and structural design of mainstream water electrolysis hydrogen production electrolyzers, followed by an overview of novel electrolyzer developments.

2. Systematic analysis of electrolyzer technology

2.1. Comparison of the principles and performances of the electrolyzers used in different water electrolysis methods for hydrogen production

2.1.1. Working principle and performance characteristics of alkaline electrolyzers

Alkaline electrolyzers are well-developed water electrolysis equipment that convert electrical energy to chemical energy by regulating current intensity, voltage, and electrolyte concentration.

The electrolysis principle involves ion migration under electric field force: anode oxidation (water loses electrons to generate oxygen) and cathode reduction (electrons gained to produce hydrogen), forming a current loop for energy conversion.

Directional ion migration under electric field alters electrolyte distribution, enabling ion separation/aggregation, driving electrode reactions, and ensuring continuous electrolysis.

The electrolyte enables ion conduction, reduces resistance, and ensures smooth current flow; its concentration, temperature, and pH directly affect electrolysis efficiency and stability [1].

Alkaline electrolyzers feature stable high hydrogen production rates, long service life (suitable for large-scale production), and low cost, making them currently the most mature and economical hydrogen production method.

2.1.2. Working principles and performance characteristics of proton exchange membrane electrolyzers

Proton exchange membrane (PEM) electrolysis uses a proton exchange membrane as solid electrolyte and pure water as raw material. Under external direct current, oxygen is generated at the anode (oxidation) and hydrogen at the cathode (reduction), with the process involving four stages.

Step 1: Deionized water enters the anode, flows to the membrane electrode assembly via channels, and undergoes oxygen evolution at the anode catalytic layer to produce oxygen, protons, and electrons. Step 2: Oxygen/unreacted water is discharged; protons migrate through the membrane to the cathode. Step 3: Electrons flow from anode to cathode via external circuit. Step 4: Electrons and protons combine at the cathode catalytic layer to form hydrogen, exiting through the cathode channel [2].

DOI: 10.54254/2755-2721/2026.CH36864

Proton exchange membrane electrolyzer cells (PEMECs) feature rapid start-up, high current density, and high stack efficiency. However, their acidic/oxidative environment requires expensive materials (iridium, platinum, titanium), leading to high costs and suitability for small-scale rapid-response applications. China's PEM technology is in early commercialization, with a gap compared to Western countries.

2.1.3. Working principles and performance characteristics of anion exchange membrane electrolyzers

Anion exchange membrane (AEM) electrolysis decomposes water into hydrogen and oxygen via electrochemical processes. Its core anion exchange membrane enables selective hydroxide ion transport for charge migration while blocking gas/electron direct transfer to avoid side reactions. Key components include: catalyst layer (loading high-activity hydrogen/oxygen evolution catalysts), gas diffusion layer (gas/electrolyte transport and reaction interface stability), and sealing structure (preventing electrolyte leakage and gas mixing for safe operation) [3].

AEM electrolysis addresses limitations of alkaline and PEM electrolysis, offering advantages: non-noble metal catalysts (eliminating PEM's noble metal reliance), high dynamic response (rapid regulation, compatible with intermittent renewable energy), and operational flexibility (adapting to various scales, direct seawater use). Current challenges include membrane performance bottlenecks, catalyst activity/stability, and system integration, all under active research with promising prospects [4].

2.1.4. Working principle and performance characteristics of solid oxide electrolyzers

Solid oxide electrolysis (SOEC) operates at 600–1000°C with core components of anode, cathode, and solid electrolyte. Water dissociates into hydrogen and oxygen ions at the cathode; oxygen ions migrate through the solid electrolyte to the anode, releasing electrons to form oxygen. Electrons flow via external circuit to the cathode, completing electrolysis.

SOEC advantages include high efficiency, product flexibility, and high-temperature thermal synergy, suitable for integrating renewable energy/industrial waste heat for green hydrogen/syngas. China has made progress in efficiency and small-scale demos but needs breakthroughs in durability, cost, and megawatt-scale integration [5].

2.2. Design research on key components of electrolyzers

2.2.1. Diaphragm

Electrolyzer diaphragms prevent H_2/O_2 mixing, avoid short circuits, and enable ion conduction for charge balance. Performance directly impacts safety and efficiency, with structural variations across electrolyzer types.

Alkaline electrolyzers use porous diaphragms for hydroxide ion transport and gas separation, though high ohmic loss and mechanical strength needs limit current density. They operate in 30% KOH; commercial materials pose environmental risks, while polyphenylene sulfide (excellent alkali resistance) requires pore structure optimization to reduce resistance [1, 4].

Proton exchange membrane electrolyzers use perfluorosulfonic acid membranes as solid electrolytes for proton conduction and gas barrier. Low gas permeability and rapid response suit

DOI: 10.54254/2755-2721/2026.CH36864

high current density operation, but acidic environment requires chemical stability; high cost and high-temperature mechanical degradation remain issues [1, 2].

Anion exchange membrane electrolyzers use polyarylether/polysulfone main chains modified with quaternary ammonium groups for hydroxide ion conduction and gas separation. Ionic conductivity is half that of proton exchange membranes, with cationic groups prone to Hofmann elimination in alkaline environments. Recent studies improved stability via spacer groups and metal coordination, but long-term durability is insufficient [4].

Solid oxide electrolysis cells use dense ceramic oxides as oxygen ion conductors with 0.1 S/cm ionic conductivity at high temperatures. Thermal cycling causes interfacial delamination (alleviated by gradient doping), and Ni-YSZ electrode redox stability issues persist [5].

2.2.2. Electrodes

Electrodes in electrolyzers serve as electrochemical reaction sites and determine hydrogen production efficiency.

Alkaline electrolyzer electrodes are mostly nickel-based (low cost but insufficient catalytic activity). Co/Mo doping improves activity, though high current density causes gas bubble blockage, requiring electrode porosity optimization [1].

Proton exchange membrane electrolyzer electrodes rely on noble metal catalysts, with iridium loading determining cost. Core-shell structures reduce iridium loading to 0.5 mg/cm² but lack durability in acidic environments [2].

Anion exchange membrane electrolyzer electrodes use non-noble metals/carbon-based materials; hydroxyl-based anodes achieve high current density in KOH. Catalyst dissolution/agglomeration issues persist, requiring nitrogen-doped carbon coating for stability [1, 3].

Solid oxide electrolysis cell anodes are mostly perovskite materials (high-temperature electronic/ionic conductivity). Ni-YSZ anodes suffer from sulfur poisoning and carbon deposition, requiring Cu or gadolinium-doped ceria doping for stability [5].

2.2.3. Plate

Plates in electrolyzers function for current collection, electrode support, gas-liquid distribution, and single-cell isolation, requiring high conductivity, corrosion resistance, and processability.

Alkaline electrolyzers use nickel-coated steel separator plates, but alkaline electrolyte corrodes the nickel coating, necessitating laser etching for improved corrosion resistance [1].

Proton exchange membrane electrolyzer bipolar plates are titanium/gold-plated titanium, requiring platinum coating to reduce contact resistance; 3D-printed titanium plates reduce weight by 30% [2].

Anion exchange membrane electrolyzer bipolar plates use stainless steel/nickel-based alloys; pure water operation requires hydrophilic coating optimization, with contact resistance controlled below 20 mΩ·cm² [3, 4].

Solid oxide electrolysis cell interconnect plates use ceramic-metal composites (matching thermal expansion). Sealing is critical: glass-ceramic materials must have leak rates <0.01 sccm/cm at 800°C [5].

DOI: 10.54254/2755-2721/2026.CH36864

2.3. Structural design of current electrolytic cells

2.3.1. Flow field structure design

Flow field structure design for proton exchange membrane and anion exchange membrane electrolyzers is relatively well-researched.

For proton exchange membrane electrolyzers, parallel flow field optimization shows vertical channel width significantly affects performance: reducing width improves reaction uniformity, while horizontal channel widening requires inlet-outlet adjustment to avoid uneven gas distribution. Serpentine channels in low-velocity regions enhance gas distribution (especially at low voltage). Foam metal flow fields benefit from thinner titanium felt and higher porosity, with circular cross-sections outperforming polygonal ones. Increasing diffusion layer hydrophobicity/porosity optimizes two-phase flow transport [6].

In anion exchange membrane electrolyzer flow field comparisons, double-serpentine flow field exhibits optimal overall performance (moderate pressure drop, highest H_2 concentration, uniform temperature). Single-serpentine enhances mass transfer but has excessive pressure drop; parallel flow field shows worst performance due to uneven distribution. Appropriate pressure drop increase benefits mass transfer, requiring balance between performance and energy consumption [7].

PEM electrolyzer flow field design should optimize vertical channel dimensions, potentially incorporating serpentine structures. AEM electrolyzers benefit from double-serpentine flow fields, balancing pressure drop, temperature uniformity, and efficiency [7].

Figures 1 present a comparison of flow velocity distributions in the flow field of anion exchange membrane electrolyzers, as shown below:

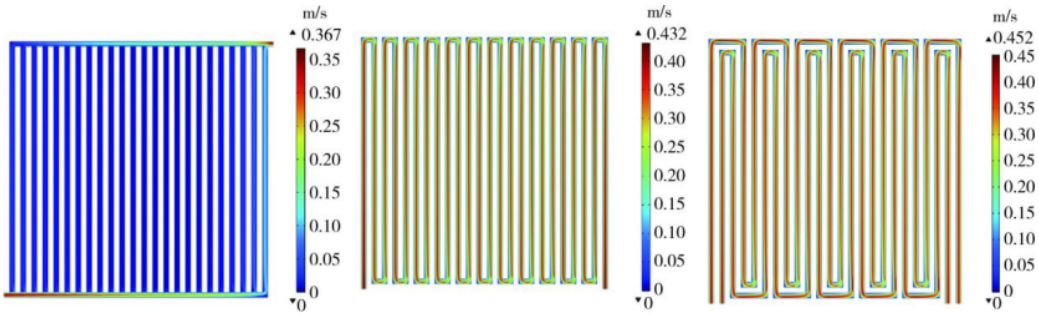

Figure 1. Flow velocity distribution comparison of parallel, single serpentine, and double serpentine flow fields in AEM electrolyzers [7]

2.3.2. Sealing and compacting structure

Electrolyzer sealing design focuses on seal grooves (around H_2 outlet, water inlet, gas-water outlets) and rings. Grooves have inverted trapezoidal cross-sections with top length 1.1-1.3 times the sealing ring. Rings use EPDM, PTFE, or fluorosilicone; interference fit forms a conical self-tightening structure, ensuring reliability and cost reduction [8].

The specific sealing structure is shown in the figure 2below:

DOI: 10.54254/2755-2721/2026.CH36864

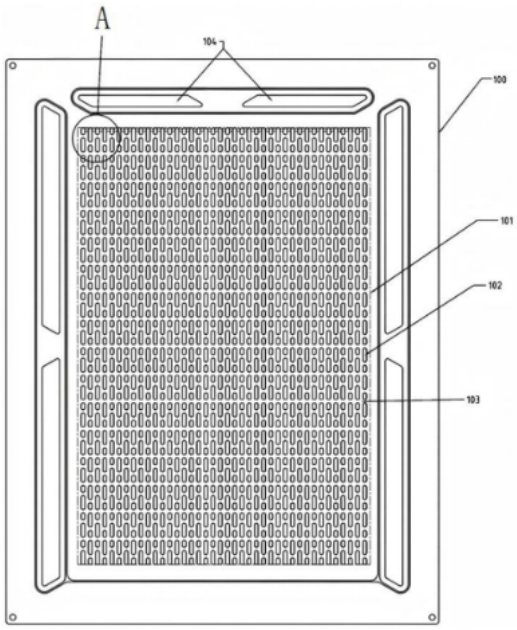

Figure 2. A sealing structure [8]

Electrolyzer compression structure components: Spring (provides compression force via deformation); Sleeve (isolates spring, restricts excessive compression); Connecting rod (carrier for spring/fastener); Fastener (fixes spring compression via threaded connection); First pressure plate (transfers pressure to spring, closes sleeve); Second pressure plate (positions sleeve, transmits compression force uniformly) [9]. Compression structure is shown in Figure 3.

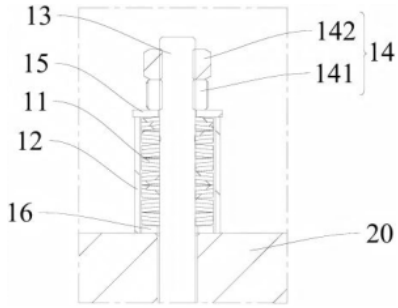

Figure 3. Compacting structure [9]

11-Spring;12-Sleeve;13-Connecting rod;14-Fastener;141-First fastening sleeve;142-Second fastening sleeve;15-First pressure plate;16-Second pressure plate

2.3.3. Stacked assembly method

Electrolyzer stack assembly core: precision solutions ensuring sealing under high-pressure/corrosive conditions, stable electrical contact, and efficient reactant/product transport, with implementation varying by technical pathway.

General machinery compression design: spring-sleeve and connecting rod system provides stable, adjustable compression force, uniformly distributed via pressure plates to balance stress relaxation and prevent seal failure [9].

PEM electrolyzer laminated structure: membrane electrode assembly as core, stacked as "bipolar plate-flow field plate-membrane electrode". Performance depends on bipolar plate flow field design

DOI: 10.54254/2755-2721/2026.CH36864

(serpentine/parallel channels) to optimize gas distribution and product discharge [6, 10].

AEM electrolyzer stack: structurally similar to PEM but with anion-exchange membrane electrode core, requiring flow field design for uniform electrolyte distribution and gas discharge [1, 4, 10].

Alkaline electrolyzer arrangement: traditionally uses end plates to compress diaphragm, electrodes, and seals. Improved via digital twin technology to optimize clamping force/temperature, enhancing sealing and stability [1, 10].

Cutting-edge stacking technologies:

Directional gradient stacking: anode titanium felt gradient design improves gas-liquid transport through pore structure regulation, reducing voltage loss [10].

Metallic support structures: applied to high-temperature solid oxide electrolysis cells, metallic substrates replace ceramics, improving thermal shock resistance for rapid start-stop scenarios [5].

Future trends: intelligentization, material/structural innovation, and refined flow field optimization to improve efficiency, power density, and durability [1].

2.4. Current status of novel electrolysers

2.4.1. A more efficient proton exchange membrane water electrolyzer: pressurized water electrolysis technology with hydrophobic gas diffusion layers

Novel hydrophobic gas diffusion layer PEM electrolyzer enhances efficiency through full-pressure operation (injecting pressurized water up to 0.4 MPa via hydrophobic GDL for gas-liquid separation and dried pressurized H_2/O_2 output without external compressor), dehydration-resistant design (direct water injection into Nafion membrane prevents high-temperature dehydration, increases current density, and enables reversible bidirectional energy conversion with fuel cells); compared to conventional PEM electrolyzers with low gas-liquid separation efficiency, its novel structure optimizes water management via hydrophobic GDL, achieving current density improvements of 117 mA cm^{-2} (25 °C) and 237 mA cm^{-2} (80 °C) at 0.4 MPa water pressure, stable Faradaic efficiency (>85%) with H_2/O_2 evolution rates matching theoretical values and minimal gas cross-leakage; the hydrophobic GDL uses AB/PTFE/PVDF composite with high mechanical strength and uniform pores, with application prospects in hydrogen refueling stations (direct pressurized H_2 storage, reduced purification) and future extension to high-temperature (>100°C) electrolysis [11].

2.4.2. Innovative design of bipolar membrane electrolyzers

Bipolar membrane (BPM) electrolyzers enhance efficiency, cost-effectiveness, and durability through structural and material innovations: Cui et al. developed a zero-gap electrolyzer by integrating a cation exchange membrane and BPM, enabling rapid seawater intake and efficient electrolysis via a porous transport layer, with BPM internal acidic/alkaline regions optimizing HER/OER kinetics; modular stacking supports large-scale application, showing stable voltage and ~100% Faradaic efficiency during 70-hour continuous operation at 100 mA cm^{-2}; material innovations include ion-selective separation (BPM inhibits seawater impurity ion transport via electrostatic repulsion to prevent corrosion and efficiency loss) and bipolar membrane interface (CEL/AEL interface drives rapid water splitting under reverse bias, creating differentiated HER/OER environments to boost efficiency); performance advantages consist of high-efficiency gas separation (CEM-BPM integration isolates H_2/O_2, eliminating explosion risk and outputting dry pressurized gas) and cost control (BPM reduces precious metal reliance and manufacturing costs via

DOI: 10.54254/2755-2721/2026.CH36864

modular design compared to traditional PEM); it is ideal for seawater electrolysis (no pretreatment), directly coupling with desalination for low-cost, high-efficiency green H_2 production, and is expected to become mainstream with membrane optimization [11-13].

2.4.3. Design of membrane-free electrolyzers

Membraneless electrolyzers eliminate ion exchange membrane dependence through innovative reactor and catalyst designs to reduce costs and enhance efficiency: core functional replacement achieves traditional membrane functions (ion transport, gas separation) via fluid dynamics control (gas-liquid product separation using laminar flow or microchannels) and catalyst interfacial engineering (directional bubble release through Janus catalyst surfaces), with key challenges including gas cross-contamination risks and bubble clogging under high current density; innovative reactor designs feature decoupled electrolyzers (dual-chamber configuration with NaBr electrolyte and pump circulation, where Br^- oxidizes to BrO_3^- during cathode H_2 generation and BrO_3^- decomposes to Br^- and O_2 in the catalysis chamber, achieving 1 A cm^{-2} at 2.4 V with Faradaic efficiency >95% and 30% system cost reduction) and nanofluid electrolyzers (micro/nano dual-channel for water supply and reaction sites, utilizing EDL effect to drive H^+/OH^- migration and form local acid/base environments, reaching 2.8 A cm^{-2} at 1.7 V in pure water electrolysis with Ni anode and 60% cost reduction); biomimetic catalyst designs include Rose Petal Effect Electrodes (hydrophobic SiO_2 microspheres combined with hydrophilic catalysts in Cassie wetting state, enabling instant bubble detachment without accumulation at 4.2 A cm^{-2}, H_2/O_2 yield ratio 2:1, and energy efficiency 61.5%) and Janus Catalysts (dual HER/OER catalytic activity with gas separation via hydrophilic-gas-phobic interface) [12, 14].

Table 1 compares current density, voltage, gas purity, and cost advantages of the three designs, highlighting distinct strengths.

Table 1. Comparison of decoupled, nanofluidic, and RPEM bionic electrode designs

Design Type	Current Density	Voltage (at 1 A cm^{-2})	Gas Purity	Cost Advantage
Decoupled configuration	1 A cm^{-2}	2.4 V	>99%	Membrane-free, 30% cost reduction
Nanofluidic configuration	2.8 A cm^{-2}	1.7 V	>98%	Free of noble metal catalysts
RPEM bionic electrode	4.2 A cm^{-2}	2.0 V	>99%	Reduced maintenance cost

3. Conclusion

This paper comprehensively analyzes electrolyzer performance, components, structure, and innovative designs for hydrogen fuel cell applications, addressing how electrolyzer advancements reduce green hydrogen costs and enable large-scale fuel cell deployment. Current technological landscape: Alkaline electrolyzers are mature and low-cost but have slow dynamic response; PEM electrolyzers offer high efficiency and fast response but rely on precious metals (high capital costs); AEM electrolyzers combine advantages with great potential but face membrane stability challenges; SOECs achieve highest theoretical efficiency but suffer from high-temperature material and sealing

DOI: 10.54254/2755-2721/2026.CH36864

issues. Key innovations include "de-noble-metalization," membrane-free configuration, and structural optimization (flow field, sealing, compression). Electrolyzer technology is core to green hydrogen production, with breakthroughs determining economic viability and fuel cell commercialization. Future research will focus on membraneless/bipolar membrane electrolyzers, non-noble metal catalysts, and component durability. Advancement directions: material system innovation, design concept renovation, and manufacturing process/intelligence improvement, aiming to boost efficiency, reduce costs, and extend lifespan for large-scale green hydrogen development.

References

[1] Yin, S., Jiang, W., & Wen, H. (2025). Research status and development prospects of hydrogen production technology in alkaline electrolyzer. *Journal of Xihua University (Natural Science Edition), 44*(1), 168–180.
[2] Cui, X., Yan, Z., Wang, X., Ji, M., Tang, X., Shen, S., et al. (2024). Development status and prospects of proton exchange membrane water electrolysis technology for hydrogen production. *Sino-Global Energy, 29*(7), 22–30.
[3] Hu, X. (2024). Analysis of hydrogen production technology by anion exchange membrane electrolysis. *Leather Manufacture and Environmental, 5*(24), 8–10.
[4] Qian, S., He, Y., Weng, W., Wang, Z., & Rong, J. (2024). Research progress of anion exchange membrane water electrolysis technology for hydrogen production. *Advances in New and Renewable Energy, 12*(1), 1–14.
[5] Wang, B., Wang, R., Lu, R., Du, Q., & Jiao, K. (2025). Development and industrialization progress of solid oxide cell in China. *International Journal of Green Energy, 22*(2), 334–342.
[6] Quan, B. (2021). Optimization and design of flow field structure in proton exchange membrane electrolyzer [Master's thesis, Changchun University of Science and Technology].
[7] Ding, R., Chen, T., Lan, Y., Chen, Z., & Xiao, F. (2024). Effect of the flow field structures on the performance of anion exchange membrane water electrolyzer. *Journal of Hebei University of Science and Technology, 45*(6), 582-589.
[8] Tang, C., & Wang, S. (2024). Bipolar plate of water electrolyzer with conical self-tightening sealing structure (CN Patent No. 118773641A).
[9] Huang, B., Fu, X., Wen, L., Zhang, Z., & Lu, L. (2026). An electrolyte cell compressing structure and electrolyte cell (CN Patent No. 223793245U).
[10] Zhu, Z. (2025). Structural optimization and performance study of anode porous transport layers for proton exchange membrane electrolyzer [Master's thesis, North China Electric Power University (Beijing)].
[11] Vediyappan, V., Lai, Q., Fujisaki, T., Andrews, J., Sone, Y., Kwati, L., & Matsumoto, H. (2024). Pressurized water electrolysis using hydrophobic gas diffusion layer with a new electrolyzer cell structure. *Solid State Ionics*.
[12] Feng, Z., Zhang, Y., Li, Z., Zhang, A., Li, J., Zhang, Q., & Wang, L. (2025). Advancements of innovative water electrolyzers for hydrogen production. *Sci China Mater, 68*(7), 2191–2204.
[13] Liu, S. (2025). *Structural design and hydrogen production performance study of a square filter-press type alkaline water electrolyzer* [Master's dissertation, Hefei University of Technology].
[14] Khan, S. A., & Koç, M. (2025). Advancing electrolyzer design through additive manufacturing: A review on 3D printing in hydrogen electrolysis. *International Journal of Hydrogen Energy, 174*, 151240.