Proceedings of the 4th International Conference on Functional Materials and Civil Engineering
DOI: 10.54254/2755-2721/2026.36690

Research Progress on High-Performance Lithium Metal Batteries

Chengxi Wei

College of Chemistry and Environmental Engineering, Yangtze University, Jingzhou, China
ncwcbcdd_0810@qq.com

Abstract. Lithium metal batteries are regarded as the main technical route to break through the upper limit of energy density of traditional lithium-ion batteries, owing to the high theoretical specific capacity and low electrode potential of the lithium metal anode. However, during lithium deposition and stripping, dendrite growth, unstable solid electrolyte interphase, volume effect and electrolyte side reactions occur, which still significantly limit the cycle life and safety of lithium metal batteries. Taking high-performance lithium metal batteries as the main thread, this paper first explains the working mechanism and performance issues of traditional lithium-ion batteries, and then sorts out important materials and preparation methods including lithium metal anode structure design, solid-state electrolyte preparation, cathode matching, and electrode-electrolyte interface engineering. This paper focuses on comparing the effects of different solid-state electrolyte modes on cycle life, safety, rate performance and engineering adaptability, and summarizes the improvement effects of three-dimensional host frameworks, artificial SEI, composite solid-state electrolytes and in-situ interface construction on the comprehensive performance of batteries. Finally, this paper analyzes the development bottlenecks of high-performance lithium metal batteries from the aspects of solid-solid interface impedance, room-temperature ion transport, large-scale preparation and safety evaluation, so as to provide references for the design of batteries with high safety, long cycle life and high specific energy.

Keywords: lithium metal battery, lithium dendrite, solid-state electrolyte, interface engineering, high energy density

1. Introduction

The global energy structure is undergoing a low-carbon transition, and the demand for transportation electrification and large-scale energy storage continues to grow. Electrochemical energy storage technology no longer only focuses on capacity improvement, but competes comprehensively in terms of energy density, safety, cycle life and engineering manufacturability. Traditional lithium-ion batteries complete energy storage through the reversible intercalation and deintercalation of lithium ions between cathode and anode materials. After years of development, they have formed a relatively mature industrial model and been widely applied to consumer electronics, new energy vehicles, energy storage power stations and other fields. However, with the continuous expansion of

© 2026 The Authors. This is an open access article distributed under the terms of the Creative Commons Attribution License 4.0 (https://creativecommons.org/licenses/by/4.0/).

DOI: 10.54254/2755-2721/2026.36690

application scenarios with long endurance, high rate and high safety, the problems of the capacity limit of graphite anodes, the flammability of liquid organic electrolytes and interface side reactions under high voltage conditions have become more prominent, and the space for traditional material systems to further improve specific energy has been restricted [1].

Among various next-generation battery systems, lithium metal anodes are regarded as the main direction to break through the energy density bottleneck of existing lithium-ion batteries due to their high theoretical specific capacity, low electrochemical potential and relatively light weight. If lithium metal is effectively combined with high-capacity sulfur cathodes, high-voltage layered oxide cathodes or solid-state electrolyte systems, it is expected to significantly improve the device-level energy density of batteries. However, lithium metal is not a material that can be directly used just by replacing the graphite anode. During deposition and stripping, intense interface reconstruction will occur, and uneven electric field and ion flux will cause dendrite growth, dead lithium accumulation and local volume change. Lithium metal has high reactivity, which will continuously consume the electrolyte and form an unstable solid electrolyte interphase. This situation will reduce the coulombic efficiency and shorten the cycle life [2].

Existing studies mainly focus on electrolyte design, interface stabilization and battery structure optimization to solve the above problems. Methods such as high-concentration electrolytes, localized high-concentration electrolytes, functional additives and artificial SEI can regulate the solvation structure and interface film formation process, making lithium deposition more uniform [3]. Solid-state electrolytes are generally considered to be the main technical method to improve the safety of lithium metal batteries and prevent thermal runaway risks, due to their inherent non-flammability, good thermal stability and mechanical shielding effect [4]. However, solid-state systems still face challenges such as insufficient solid-solid contact, high interface impedance, insufficient chemical/electrochemical stability and great difficulty in large-scale processing. Therefore, it is necessary to construct a stable buffer layer through interface engineering [5] and carry out collaborative design with surface modification of high-voltage cathode materials [6].

In view of this, this study analyzes the research status and evolution logic of high-performance lithium metal batteries. This paper first reviews the operation mechanism of lithium-ion batteries and the energy limitations they encounter, and then explains the reaction kinetic characteristics of lithium metal anodes and their matching relationship with high-energy cathodes. After that, this paper focuses on important material technologies such as anode topology design, solid-state electrolyte development, electrode matching and interface collaborative modification, and analyzes and evaluates the overall electrochemical performance combined with cycle life, safety and engineering practical prospects. Meanwhile, the problems of lithium dendrite suppression, interface side reaction control, room-temperature ion transport and large-scale preparation are summarized. This paper aims to provide references for material selection and structure design of lithium metal batteries with high safety, long cycle life and high specific energy.

2. Development bottlenecks of lithium-ion batteries and research background of lithium metal batteries

2.1. Demand for high-energy-density energy storage

Energy transition and carbon neutrality goals have promoted the development of electrochemical energy storage technologies with high energy density, high safety and long cycle life in the new energy field. Modern new energy vehicles, smart grids, portable electronic devices and potential electric aviation applications have put forward higher requirements for battery endurance, rate

DOI: 10.54254/2755-2721/2026.36690

performance and safety. The further improvement of energy density of traditional lithium-ion batteries is jointly restricted by anode capacity, electrolyte safety and high-voltage stability.

Lithium metal anode has a theoretical specific capacity of 3860 $mAh \cdot g^{-1}$ and a standard electrode potential of about -3.04 V, which can significantly improve the theoretical specific energy of batteries. Therefore, lithium metal batteries are considered to be an important development direction of next-generation high-specific-energy energy storage systems [6]. Different from traditional lithium-ion batteries, the core problem of lithium metal batteries is no longer just the efficiency of ion intercalation and deintercalation, but the collaborative regulation of lithium deposition morphology, interface stability and battery safety.

2.2. Composition and performance limitations of lithium-ion batteries

Lithium-ion batteries are mainly composed of cathode, anode, separator and electrolyte. Among them, the cathode and anode undertake reversible redox reactions and lithium ion storage, and the separator plays the role of isolating electrons and allowing ion migration. The electrochemical stability, thermal stability and ionic conductivity of the electrolyte will directly affect the safety, working temperature range and rate performance of the battery.

According to cathode materials, lithium-ion batteries can include lithium cobalt oxide, lithium manganate, lithium iron phosphate and ternary material systems; according to electrolyte forms, they can be divided into liquid lithium-ion batteries, polymer lithium-ion batteries and all-solid-state lithium-ion batteries. Although the existing graphite anode system has good cycle stability, its theoretical capacity is limited; liquid organic electrolytes are flammable and prone to side reactions under high voltage conditions. These factors jointly promote the research on lithium metal anodes and solid-state electrolytes.

2.3. Rocking-chair working mechanism of lithium-ion batteries

The working principle of lithium-ion batteries is usually called the "rocking-chair" mechanism, that is, lithium ions migrate reversibly between the cathode and anode and intercalate into and deintercalate from the corresponding lattice structures. During charging, lithium ions deintercalate from the cathode material, migrate to the anode through the electrolyte and intercalate into the layered structure of the anode, while electrons flow from the cathode to the anode through the external circuit; during discharging, the process is reversed: lithium ions deintercalate from the anode and re-intercalate into the cathode, and electrons do work through the external circuit to form current, as shown in Figure 1.

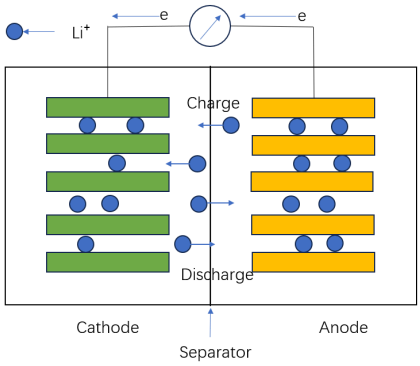

Figure 1. Schematic diagram of the working principle of lithium-ion batteries

DOI: 10.54254/2755-2721/2026.36690

From the perspective of reaction regions, the charge-discharge process of lithium-ion batteries involves both lithium ion deintercalation inside the bulk phase of electrode materials and charge transfer inside the bulk phase of electrode materials, which jointly determine the capacity release, rate performance and cycle stability of the battery.

3. Structure and key materials of lithium metal batteries

3.1. Definition and reaction characteristics of lithium metal batteries

Lithium metal battery is a promising secondary energy storage system, which uses metallic lithium directly as the anode to achieve high energy density. Its operation mode is different from the intercalation reaction of traditional graphite anodes, and mainly relies on the dynamic deposition and stripping of lithium on the electrode surface. During charging, lithium ions detach from the cathode, pass through the electrolyte layer, reach the anode interface and obtain electrons, and then are reduced to metallic state. During discharging, metallic lithium is oxidized and dissolved, and the generated lithium ions re-enter the cathode lattice structure.

Due to the characteristics of high specific capacity, light weight and low redox potential, lithium metal anode is regarded as a material matching high-voltage or high-capacity cathodes, so as to significantly improve the device-level energy density [7]. However, non-uniform lithium deposition easily leads to dendrite growth, accompanied by "dead lithium" accumulation and interface side reactions [8]. These factors will reduce the coulombic efficiency, shorten the cycle life, and also cause the situation of piercing the separator or solid-state electrolyte, resulting in internal short circuit of the battery, and even serious safety problems such as thermal runaway.

3.2. Lithium metal anode and interface stabilization

The lithium metal anode determines the high specific energy characteristics of lithium metal batteries. At present, the focus of relevant research has gradually shifted from the traditional lithium foil mode to two main directions: structured lithium metal anodes and anode-free architectures. The main idea of structured design is to use three-dimensional porous frameworks such as copper foam, carbon fiber or polymer network as the loading substrate of metallic lithium. In this way, the local current density of the electrode can be reduced, the volume deformation during lithium deposition and stripping can be alleviated, and uniform deposition of lithium inside the pores can be promoted [9].

Interface stabilization is the main idea, which can inhibit dendrite growth and side reactions. Methods such as fluoride pretreatment, atomic layer deposition and functional coating can form an artificial solid electrolyte interphase layer, improving the chemical compatibility between the lithium anode and the electrolyte [10]. Anode-free batteries adopt the design of directly depositing metallic lithium on the surface of the current collector, which can reduce excess lithium source and improve the theoretical energy density of the system. However, this configuration has higher requirements for the uniformity of lithium deposition and the coulombic efficiency during cycling. At present, the achievement of its performance still heavily relies on electrolyte modification additives, lithiophilic coating of current collectors and refined interface regulation methods [11].

DOI: 10.54254/2755-2721/2026.36690

3.3. High-capacity cathode materials

In order to give full play to the energy density advantage of lithium metal anodes, we should find compatible high-specific-energy or high-voltage cathode modes. Under this background, sulfur cathodes and oxygen cathodes have become the focus of research relying on obvious theoretical advantages. The former has great capacity potential, but is affected by polysulfide shuttle and charge-discharge volume change. This theory has a high theoretical energy upper limit, but the reaction kinetics is relatively slow, and the evolution side reactions are relatively complex, which limit the exertion of actual efficiency.

In contrast, high-voltage intercalation cathode materials such as high-nickel ternary materials, NCA and lithium-rich manganese-based materials are usually regarded as a compromise strategy for industrial advancement because of their high compatibility with existing production processes. Although matching them with lithium metal anodes can break through the energy density bottleneck, it will also face the challenges of lattice oxygen precipitation, electrolyte oxidative degradation and phase interface instability. Therefore, current modification research mainly focuses on important methods such as surface coating engineering, component concentration gradient formation and functional interface modification [12].

4. Preparation of key materials and interface regulation strategies for high-performance lithium metal batteries

4.1. Preparation of lithium metal anode materials and interface regulation

Lithium metal anode is the main part of high-specific-energy secondary batteries, and its performance affects the upper limit of energy density. However, during its complex electrochemical deposition and stripping cycles, fluctuations in local current density, differences in electrolyte wettability, and heterogeneity of interface phases often cause uncontrollable changes. Researchers inhibit dendrite growth fundamentally and avoid the accumulation of "dead lithium" by forming a three-dimensional porous substrate, carrying out lithiophilic modification on the surface of the current collector, and designing a composite structure. These strategies rely on the spatial confinement of lithium precipitation in micro-channels, which not only induces uniform deposition of metallic lithium, but also buffers the intense volume stress during charge and discharge by using the physical space of the porous structure [13].

The modification methods in the research and development field of lithium metal anodes are diversified. The process includes pretreatment of lithium foil to form a three-dimensional support framework, promoting lithiophilicity of current collectors, designing in-situ or ex-situ artificial SEI, and improving the anode-free interface. The central goal of such strategies is to accurately intervene in lithium nucleation behavior and balance the distribution of local current density, and improve the deposition and stripping efficiency of metallic lithium during cycling through bottom-up regulation.

Whether the effectiveness of anode structure design can be transformed into excellent cycle stability mainly depends on the precise intervention in the interface evolution process. Through artificial establishment of SEI, surface functional modification or regulation of electrolyte components, the kinetic path of interface reaction can be optimized, and an inorganic protective layer with high modulus and uniform ion flux can be generated, thereby preventing irreversible loss between active lithium and electrolyte [14, 15]. Based on the above viewpoints, the improvement of lithium metal anode performance cannot only stay on active materials, but also take the main

DOI: 10.54254/2755-2721/2026.36690

framework, interface changes and electrolyte environment as a whole for overall coordinated construction.

4.2. Types and preparation methods of solid-state electrolytes

In the lithium metal battery system, the phase selection and preparation process of solid-state electrolytes are the main links connecting material creation and electrochemical characterization, and determine the ion migration efficiency and interface evolution process at the underlying logic. Existing electrolyte categories include sulfide, oxide, polymer, halide, composite and thin-film systems. Sulfide electrolytes are usually synthesized by mechanochemical modification or liquid phase routes. They have good intrinsic conductivity, but it is difficult to solve their sensitivity to environmental moisture. Oxides mainly rely on high-temperature sintering or chemical synthesis methods, showing good mechanical modulus and thermal stability, but their poor sintering compactness leads to interface contact loss, which is the main problem restricting their development [16, 17].

Polymer solid-state electrolytes are usually prepared by methods such as solution casting, hot pressing, in-situ polymerization or electrospinning, and generally appear in the form of flexible films. This material shows good effects in interface wettability and processing adaptability, but its ionic conductivity at room temperature is still low, and this problem has not been solved yet [18-21]. Polymer solid-state electrolytes usually appear as flexible films and are formed by methods such as solution casting, hot pressing, in-situ polymerization and electrospinning. Although this material has good interface wettability and processing compatibility, the problem of low room-temperature ionic conductivity has been restricting its development. Table 1 summarizes the material sources, typical preparation methods and corresponding references of different solid-state electrolytes.

Table 1. Types and preparation methods of solid-state electrolytes for lithium metal batteries

No.	Material type	Main raw materials	Typical preparation methods	References
1	Polymer solid-state electrolyte (PEO/PAN-based)	PEO, PAN, LiTFSI, acetonitrile, etc.	Solution casting method, hot pressing method, in-situ polymerization method	[10-13]
2	Oxide solid-state electrolyte (LLZO)	Li_2CO_3, La_2O_3, ZrO_2, etc.	High-temperature solid-phase sintering method, sol-gel method, low-temperature synthesis method	[9, 14, 15]
3	Sulfide solid-state electrolyte (LGPS/LPSC)	Li_2S, P_2S_5, GeS_2, LiCl, etc.	High-energy mechanical ball milling + annealing, liquid phase method, cold pressing method	[16-18]
4	Halide solid-state electrolyte (Li_3YCl_6, etc.)	LiCl, YCl_3, $InCl_3$, etc.	Mechanochemical method, wet chemical method, ammonium salt-mediated synthesis/o:p>	[19-22]
5	Composite solid-state electrolyte	PEO/PVDF, LLZO, LAGP, MOF fillers, etc.	Solution blending casting method, electrospinning, filler surface modification	[23-25]
6	Thin-film solid-state electrolyte (LiPON)	Li_3PO_4 target	Radio frequency magnetron sputtering, thin film deposition	[26, 27]

4.3. Cathode matching and electrode-electrolyte interface engineering

The advantages of high-performance lithium metal batteries can only be reflected when the cathode, anode and electrolyte form a reasonable match. High-voltage cathodes such as high-nickel ternary

DOI: 10.54254/2755-2721/2026.36690

materials, NCA and lithium-rich manganese-based materials can increase energy density, but will bring problems such as oxygen release from the cathode surface, oxidative decomposition of electrolyte and transition metal dissolution; sulfur cathodes and oxygen cathodes have high theoretical capacities, but their reaction paths and side reactions are more complex. Therefore, cathode materials usually need to reduce side reactions through surface coating, concentration gradient design and functional interface layers [22].

Electrode-electrolyte interface engineering directly determines whether the above materials can form stable devices. Poor contact, space charge layers, accumulation of side reaction products and stress mismatch may occur between solid-state electrolytes and lithium metal anodes, as well as between solid-state electrolytes and high-voltage cathodes. Constructing buffer layers such as LiF, Al_2O_3 and polymer gel through wet coating, vapor deposition or in-situ reaction can reduce interface impedance and inhibit side reactions, thereby improving cycle life and rate performance [23].

5. Performance and influencing factors of high-performance lithium metal batteries

5.1. Effects of different solid-state electrolyte systems on battery performance

The effects of different solid-state electrolyte systems on the performance of lithium metal batteries are mainly reflected in four dimensions: ion transport efficiency, interface stability, mechanical strength and processing adaptability. Table 2 summarizes the key parameters and literature sources of each system. Sulfide electrolytes usually have room-temperature ionic conductivity close to that of liquid electrolytes, which is beneficial to the improvement of rate performance, but they have poor air stability and obvious interface side reactions with lithium metal and high-voltage cathodes [24, 25]. Oxide electrolytes have high mechanical strength, good thermal stability and wide electrochemical window, but rigid solid-solid contact easily leads to large interface impedance.

Polymer electrolytes have good flexibility and film-forming property, and are easy to be compatible with soft-pack battery processes, but their room-temperature conductivity and lithium ion transference number are usually insufficient, which will limit the capacity release under low-temperature and high-rate conditions. Halide electrolytes have both high ionic conductivity and good compatibility with high-voltage cathodes, and are rapidly developing systems in recent years, but their interface stability with lithium metal anodes still needs to be improved [26, 27]. Composite solid-state electrolytes have good optimization space in cycle stability and engineering adaptability by integrating the advantages of inorganic and organic phases.

Table 2. Comparison of cycle life, safety, rate performance and engineering adaptability of different solid-state electrolyte systems

Electrolyte type	Typical ionic conductivity ($S \cdot cm^{-1}$)	Cycle life performance	Safety performance	Rate performance	Engineering adaptability	Main limitations
Sulfide	10^{-3}–10^{-2}	Fast ion transport is conducive to long cycles; interface side reactions will accelerate attenuation	Non-flammable, good thermal stability; but air-sensitive, requiring strict control of water and oxygen	Relatively good	Can be formed by cold pressing, suitable for high-power solid-state batteries	Obvious interface side reactions with lithium metal and high-voltage cathodes

DOI: 10.54254/2755-2721/2026.36690

Table 2. (continued)

Oxide	10^{-4}–10^{-3}	Good chemical stability; poor interface contact limits cycling	High mechanical strength and thermal stability, strong dendrite blocking ability	Medium	Requiring high-temperature sintering or densification treatment, high process requirements	Poor solid-solid contact, large interface impedance
Polymer	10^{-5}–10^{-4}	Good interface fit; limited low-temperature and long-cycle stability	Good flexibility, but limited high-voltage resistance and thermal stability	Relatively low	Easy film formation and processing, suitable for flexible/soft-pack systems	Low room-temperature conductivity, insufficient mechanical strength
Halide	10^{-3}–10^{-2}	Relatively stable on the high-voltage cathode side; interface protection is still needed on the anode side	Good oxidation stability, but moisture sensitivity needs to be controlled	Relatively good	Can be prepared by both mechanochemical and wet chemical methods, cost to be reduced	Compatibility with lithium metal anode still needs to be improved
Composite	10^{-4}–10^{-3}	Organic/inorganic synergy; can improve cycle stability	Can take into account flexible contact and safety, with balanced comprehensive performance	Medium to relatively good	Adjustable components, high engineering adaptation potential	Filler dispersion and batch consistency need to be optimized

5.2. Comparison of cycle life, safety and rate performance

5.2.1. Cycle life and coulombic efficiency

Cycle life is mainly controlled by the reversibility of lithium deposition and stripping, the rate of interface side reactions and the stability of electrode structure. If lithium deposition is uneven, dendrites and dead lithium will form in local areas, resulting in decreased coulombic efficiency; if the interface film continues to rupture and regenerate, active lithium and electrolyte will be continuously consumed. The combined effect of three-dimensional hosts, artificial SEI and stable electrolyte systems is the key to prolonging cycle life [28].

5.2.2. Safety and interface stability

Safety mainly depends on the risk of dendrite penetration, the thermal stability of the electrolyte and whether interface side reactions are controllable. Solid-state electrolytes can reduce the thermal runaway risk caused by the flammability of liquid organic electrolytes, but it does not mean that short circuit and interface failure problems can be completely eliminated [29]. Reduction decomposition may still occur between lithium metal and electrolytes such as sulfides and halides, forming interface products that hinder ion or electron transport. Therefore, collaborative regulation of interface buffer layers and surface coating is required.

DOI: 10.54254/2755-2721/2026.36690

5.2.3. Rate performance and engineering adaptability

The level of rate performance is largely closely related to the migration resistance of lithium ions in the bulk phase of the electrolyte, grain boundaries and electrode-electrolyte interfaces. Sulfide and some halide systems are conducive to high-rate output, but environmental stability and interface reactions need to be strictly controlled; oxide systems have high mechanical strength, but solid-solid contact and sintering processes will affect the actual battery impedance; polymer and composite systems have flexible processes, but need to be repeatedly weighed among mechanical strength, interface stability and conductivity.

5.3. Current bottlenecks and optimization directions

To sum up, the further development of high-performance lithium metal batteries is still constrained by problems such as room-temperature ion transport efficiency, solid-solid interface contact, lithium dendrite suppression and consistency of large-scale manufacturing. Future research should reveal the mechanisms of lithium deposition, stripping and interface evolution on the basis of in-situ characterization and theoretical simulation collaboration, and combine material design with cell manufacturing conditions to promote the transformation of laboratory performance to repeatable and scalable engineering performance [30].

6. Conclusion and prospect

Due to its high theoretical specific capacity and low redox potential, lithium metal anode is regarded as an important material that can break through the energy bottleneck of existing lithium-ion batteries. Based on the underlying mechanism of batteries, this paper analyzes the evolution law of lithium anodes, cathode compatibility, solid-state electrolyte development and interface regulation methods. On the basis of the above, this paper makes a multi-faceted comparison of material preparation, cycle life, safety and rate performance, comprehensively evaluates the actual effects of current optimization methods, and attempts to establish a research model from mechanism analysis to material improvement and then to performance improvement.

Because of its high theoretical specific capacity and low potential, lithium metal anode is generally regarded as the main strategic material to solve the energy bottleneck of current lithium power batteries. Based on the basic principles of electrochemistry, this paper analyzes the dynamic changes of lithium anodes, cathode matching, solid-state electrolyte development and interface modification methods. Through reviewing the synthesis routes, cycle robustness, safety and high-rate charge-discharge performance, this paper objectively evaluates the actual benefits of existing improvement schemes, and attempts to form an integrated research method, which mainly includes mechanism analysis, material design and efficiency improvement.

References

[1] Lin, D., Liu, Y., & Cui, Y. (2017). Reviving the lithium metal anode for high-energy batteries. *Nature Nanotechnology, 12*(3), 194-206.
[2] Cheng, X. B., Zhang, R., Zhao, C. Z., et al. (2016). A review of solid electrolyte interphases on lithium metal anode. *Advanced Science, 3*(3), 1500213.
[3] Wang, H., Yu, Z., Kong, X., et al. (2022). Liquid electrolyte: The nexus of practical lithium metal batteries. *Joule, 6*(3), 588-616.
[4] Zhao, Q., Stalin, S., Zhao, C. Z., et al. (2020). Designing solid-state electrolytes for safe, energy-dense batteries. *Nature Reviews Materials, 5*(3), 229-252.

DOI: 10.54254/2755-2721/2026.36690

[5] Xiao, Y., Wang, Y., Bo, S. H., et al. (2020). Understanding interface stability in solid-state batteries. *Nature Reviews Materials, 5*(2), 105-126.
[6] Ren, X., Zou, L., Cao, X., et al. (2019). Enabling high-voltage lithium-metal batteries under practical conditions. *Joule, 3*(7), 1662-1676.
[7] He, X., Zhang, K., Zhu, Z., et al. (2024). 3D-hosted lithium metal anodes. *Chemical Society Reviews, 53*(1), 9-24.
[8] Wu, J., Liu, S., Han, F., et al. (2021). Lithium/sulfide all-solid-state batteries using sulfide electrolytes. *Advanced Materials, 33*(6), 2000751.
[9] Murugan, R., Thangadurai, V., & Weppner, W. (2007). Fast lithium ion conduction in garnet-type $Li_7La_3Zr_2O_{12}$. *Angewandte Chemie International Edition, 46*(41), 7778-7781.
[10] Li, X., & Gong, Z. L. (2020). Study on PEO-based polymer electrolyte and its performance in lithium-sulfur batteries. *Chinese Journal of Electrochemistry, 26*(3), 338-346.
[11] Grotkopp, N. L., Hokmabadi, M., Nebelsiek, M., et al. (2026). Simple and scalable solvent-free PEO based electrolyte fabrication by kneading for all solid state lithium sulfur batteries. *Energy Advances, 5*(2), 151-162.
[12] Ji, Y., Zhang, Y. H., Shi, F. N., & Zhang, L. N. (2023). UV-derived double crosslinked PEO-based solid polymer electrolyte for room temperature. *Journal of Colloid and Interface Science, 629*(Pt B), 492-500.
[13] Springle, E. B., Sarkar, D., Mühlau, M., et al. (2025). Performance optimization of electrospun lithium-ion conducting PAN/PEO solid polymer electrolyte. *Inorganic Chemistry, 64*(39), 19752–19763.
[14] Kalita, G., Endo, T., & Nishi, T. (2023). Recent development on low temperature synthesis of cubic-phase LLZO electrolyte particles for application in all-solid-state batteries. *Journal of Alloys and Compounds, 969*, 172282.
[15] Jung, S. K., Gwon, H., Kim, H., et al. (2022). Unlocking the hidden chemical space in cubic-phase garnet solid electrolyte for efficient quasi-all-solid-state lithium batteries. *Nature Communications, 13*, 7638.
[16] Lü, N., Sun, Z., Hu, Y. Q., et al. (2022). Preparation and properties of sulfide solid electrolyte Li_6PS_5Cl by ball milling-solid phase sintering. *Journal of Materials Engineering, 50*(2), 103–110.
[17] Gamo, H., Matsui, N., Suzuki, K., et al. (2025). Novel synthetic route for Li argyrodite solid electrolyte materials in all-solid-state batteries. *Journal of Power Sources, 648*, 237443.
[18] Yang, N. C., Wang, Y., Shuai, Y., et al. (2020). Preparation and performance study of low-cost sulfide solid electrolyte $Li_{6-x}PS_{5-x}Cl_x$. *Chinese Journal of Electrochemistry, 26*(3), 337–344.
[19] Wang, C. H., Liang, J. W., Luo, J., et al. (2021). A universal wet-chemistry synthesis of solid-state halide electrolytes for all-solid-state lithium-metal batteries. *Science Advances, 7*(37), eabh1896.
[20] Tan, Y., Beltrán, M. R., Ke, J., et al. (2025). Interfacial challenges of halide-based all-solid-state batteries. *Advanced Energy Materials, 15*(13), 2403986.
[21] Huang, L. J., Zhang, L., Bi, J. Y., et al. (2024). An insight into halide solid-state electrolytes: Progress and modification strategies. *Energy Material Advances, 4*, 0092.
[22] Yang, Z. C., Yao, H. B., Yin, Y. C., & Luo, J. D. (2025). Chloride-based superionic conductors with high electrode compatibility. *Journal of the Chinese Ceramic Society, 53*(6), 1751-1763.
[23] Li, J., Zhu, K., Yao, Z., et al. (2020). A promising composite solid electrolyte incorporating LLZO into PEO/PVDF matrix for all-solid-state lithium-ion batteries. *Ionics, 26*, 1101-1108.
[24] Du, Y. Z., Xue, B., et al. (2026). PEO/ZnO-engineered PVDF/LLZO solid-state electrolyte achieving solvent-residual suppression and interface stabilization in high-voltage lithium-metal batteries. *Journal of Energy Storage, 147*, 119981.
[25] Gan, X. M., Gu, L. J., Dong, P. P., et al. (2026). Electrospun MOFs/polymer nanofiber electrolytes for solid-state lithium batteries: Interface engineering and synergistic ion transport. *Advanced Fiber Materials, 8*(3), 920-946.
[26] Osencat, N., Clinton, E. D., Casella, J., et al. (2025). Fast magnetron sputtering of LiPON from carbon-doped Li_3PO_4 target. *Solid State Ionics, 429*, 116957.
[27] Zhang, M., Niu, Y. J., Zhang, H. C., et al. (2023). Preparation and structural analysis of lithium phosphorus oxynitride thin film electrolytes. *Journal of Guilin University of Electronic Technology*. DOI: 10.12074/202302.00096.
[28] Park, J. H., Jeong, J., Han, D., et al. (2025). Comparative study of the stability of composite cathodes based on sulfide solid electrolytes for all-solid-state lithium-ion batteries. *Chemical Engineering Journal, 525*, 170714.
[29] Foran, G., Barcha, C., St-Antoine, C., et al. (2025). The impact of solvent exposure during preparation on the performance of PEO-LAGP hybrid electrolytes. *Energy Advances, 4*, 1135-1153.
[30] Liu, G. P., Zhang, X. Y., Wu, M. C. (2026). From dead lithium to functional fillers: An in situ conversion strategy for high performance all-solid-state lithium metal batteries. *ACS Applied Materials & Interfaces, 18*(15), 21934-21944.