Proceedings of the 4th International Conference on Software Engineering and Machine Learning
DOI: 10.54254/2755-2721/2026.35561

Regression Prediction of Parole Success Rate Based on the Multidimensional Characteristics of Prisoners

Jianguo Xiao

Department of Law, Sichuan Judicial Police Vocational College, Deyang, China
1103996369@qq.com

Abstract. The parole system is an important part of the criminal punishment execution system in our country. Currently, the risk assessment of parole relies on manual experience, which has problems such as inconsistent standards and insufficient accuracy. Although traditional machine learning can quantify predictions, the single model has limited feature mining and weak generalization ability, making it difficult to meet the needs of judicial practice. Therefore, this paper integrates the advantages of deep learning and ensemble learning, and proposes the LSTM-Adaboost algorithm for predicting the success rate of parole. This algorithm uses LSTM to mine temporal and deep features, and Adaboost to optimize sample weights and improve model accuracy. Compared with various traditional algorithms, LSTM-Adaboost significantly outperforms in terms of accuracy, recall rate, precision, F1 score, AUC, with an accuracy rate of 0.855 and an AUC as high as 0.938, far exceeding the index range of models such as CatBoost and random forest, which are 0.606 to 0.770. It can achieve more accurate and efficient parole risk assessment, providing scientific decision-making support for judicial approval.

Keywords: Parole system, judicial practice, LSTM

1. Introduction

The parole system is a core component of China's criminal punishment execution system and an important measure for implementing the leniency and severity combined criminal policy and promoting the socialization of criminal justice. It plays a crucial role in motivating inmates to reform, reducing the cost of judicial execution, and facilitating the successful reintegration of criminals into society [1]. The core criterion for parole approval is whether the inmate has the risk of reoffending. This assessment result directly determines the approval outcome of the parole application and is also related to public safety and judicial credibility [2]. Currently, the parole approval work in China mostly relies on the manual experience judgment of judicial personnel, combined with traditional written assessment indicators for comprehensive evaluation. The manual assessment model is prone to be interfered by subjective cognition, work experience and other human factors, and is unable to comprehensively and accurately explore the potential correlations of multiple dimensions such as age, crime type, in-prison behavior, and social support conditions of the inmates. There are also practical problems such as inconsistent assessment standards, delayed risk identification, and insufficient determination accuracy, which cannot meet the development needs of

© 2026 The Authors. This is an open access article distributed under the terms of the Creative Commons Attribution License 4.0 (https://creativecommons.org/licenses/by/4.0/).

DOI: 10.54254/2755-2721/2026.35561

intelligent and refined judicial supervision. Therefore, it is necessary to optimize the parole risk assessment system through scientific and quantitative prediction methods [3].

With the deep implementation of big data and artificial intelligence technologies in the judicial field, machine learning algorithms have gradually become the core means for quantifying judicial risks. They provide a new technical path for accurately assessing the success rate of parole [4]. Compared with traditional manual assessment and traditional statistical analysis methods, machine learning has powerful nonlinear data fitting and feature mining capabilities, which can efficiently process the massive multi-dimensional feature data of inmates and automatically discover the potential correlation patterns between various features and parole results, avoiding the subjective bias problems of manual assessment [5]. Various traditional machine learning algorithms can achieve preliminary classification predictions of parole risks, but a single algorithm has obvious limitations. Traditional machine learning is difficult to capture the temporal correlations and deep feature information of multiple dimensions of inmates' characteristics, and the model's generalization ability is weak. When faced with complex and nonlinear judicial data samples, the prediction accuracy and stability cannot be guaranteed, and it cannot fully meet the strict requirements of judicial practice for precise assessment of parole risks.

To solve the problem of insufficient prediction accuracy of a single model and insufficient feature mining, this paper, based on the characteristics of multi-dimensional feature data of inmates, integrates the advantages of deep learning and ensemble learning, and proposes the LSTM-Adaboost classification algorithm for the research on parole success rate prediction. The LSTM neural network has excellent deep temporal feature extraction capabilities, which can fully mine the intrinsic correlations of various static and dynamic characteristics of inmates, making up for the deficiency of traditional algorithms in capturing deep features. The Adaboost ensemble learning algorithm can iteratively optimize the sample weights, continuously correct the prediction errors of weak classifiers, integrate the advantages of multiple basic models, and effectively improve the overall prediction accuracy and generalization ability of the model. The combination of the two can effectively adapt to the complex scenarios of parole risk prediction for inmates, accurately identify the key factors affecting parole results, and achieve efficient and precise classification prediction of parole success rates, providing intelligent and scientific decision-making references for judicial parole approval work.

2. Data sources

The dataset used in this study consists of a total of 1,291 sample data. The data collection and construction were carried out strictly in accordance with the business rules and judicial statistical laws of prison execution management and parole approval in our country. The data was collected from the archival information of inmates in judicial practice, comprehensively including basic personal information of inmates, criminal attribute information, in-prison reform performance, and social security conditions, etc., covering multiple core characteristics. In the data preprocessing stage, the study uniformly standardized the data value ranges of various features, eliminated abnormal samples that did not conform to judicial logic, constrained the numerical logical relationships of indicators such as the served term and the original sentence term, eliminated data logical conflicts, and standardized encoded processing of various categorical features to ensure the data's standardization and usability.

Correlation analysis was conducted for each variable, as shown in Figure 1.

DOI: 10.54254/2755-2721/2026.35561

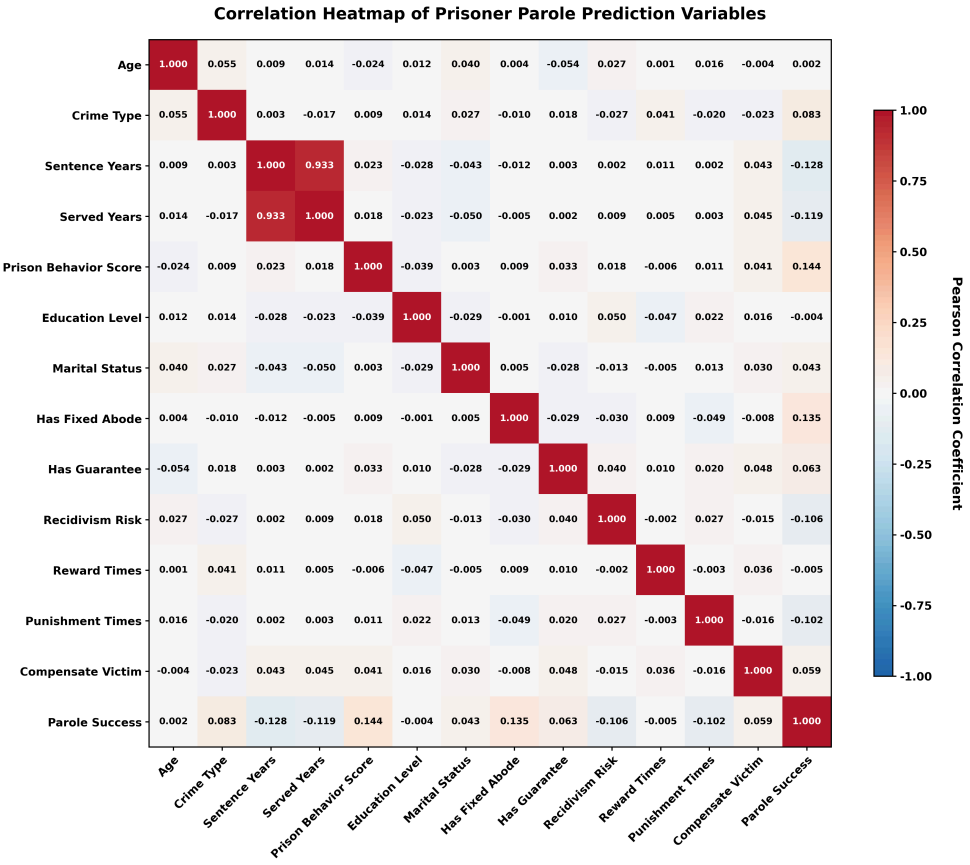

Figure 1. The correlation heat map

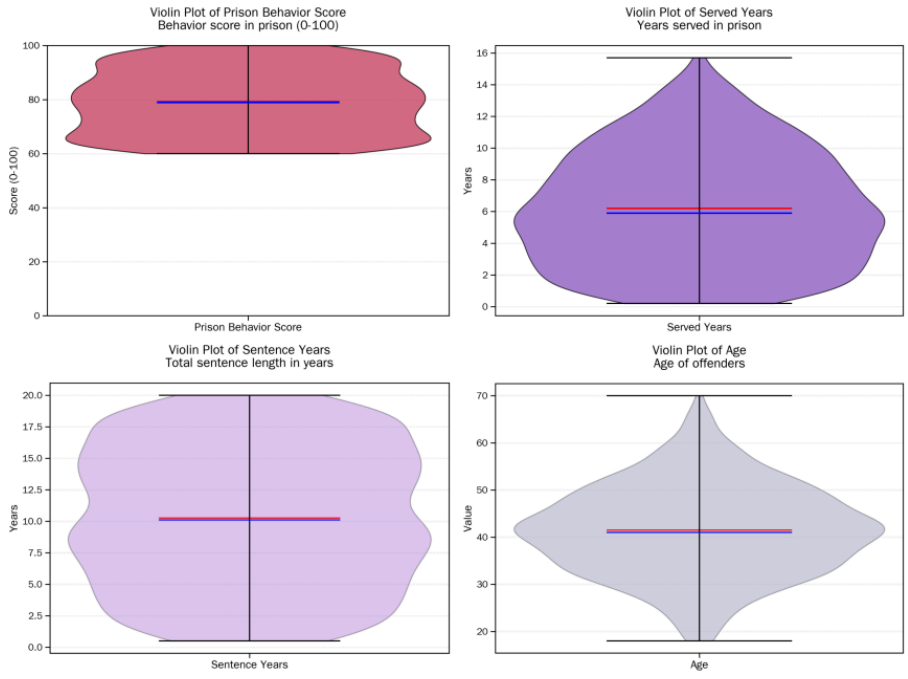

Figure 2. The violin plot

DOI: 10.54254/2755-2721/2026.35561

A violin plot analysis was conducted for each variable, and violin plots were drawn, as shown in Figure 2.

3. Method

3.1. LSTM

Long Short-Term Memory networks are a time-series deep learning algorithm that has been improved based on recurrent neural networks. They are mainly used to address the problems of long-term dependencies and gradient vanishing in traditional recurrent neural networks [6]. This algorithm utilizes a unique cell state structure to achieve the long-term retention and update of information, and internally sets three core gating structures to perform different information control functions [7]. The input gate is responsible for controlling the extent to which new information enters the cell state at the current moment. It uses an activation function to filter out effective temporal features and participates in state update. The forget gate determines, based on the temporal correlation features of the data, which information from the previous moment needs to be discarded in the cell state, filtering out redundant and invalid historical information [8]. The output gate combines the current cell state with the input features to select appropriate information for transmission to the next hidden layer. The network structure of LSTM is shown in Figure 3.

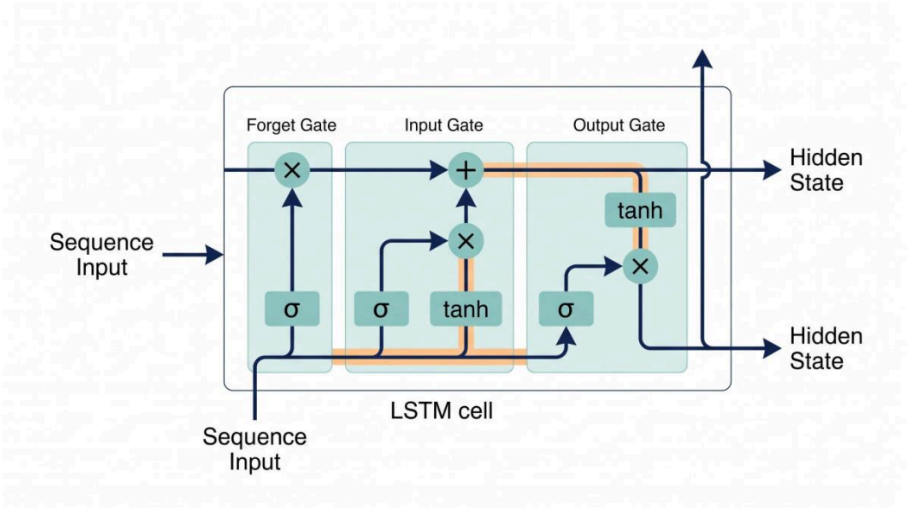

Figure 3. The network structure of LSTM

3.2. Adaboost

The adaptive boosting algorithm is a classic iterative algorithm for ensemble learning. Its core idea is to construct a highly accurate strong classifier by combining multiple weak classifiers. In the initial stage of the algorithm, equal weights are assigned to all training samples. A first weak classifier is trained using the basic learning algorithm and the classification error rate is calculated [9]. The weights of samples are adjusted based on the error rate. Samples that are misclassified will have their weight proportion increased, while samples that are correctly classified will have their weights appropriately reduced. This allows the subsequent weak classifiers to focus more on fitting the features of misclassified samples. In each iteration, a new weak classifier is trained based on the updated sample weights, and corresponding weight coefficients are assigned to each weak classifier

DOI: 10.54254/2755-2721/2026.35561

based on its classification effect. The weak classifier with higher classification accuracy will have a greater say in the final decision.

3.3. LSTM-Adaboost

The LSTM-Adaboost algorithm uses the long short-term memory network as the basic weak learner in the Adaboost framework, integrating the sequential feature extraction capability and the optimization ability of ensemble learning. The algorithm first initializes the distribution weights of the training samples, inputs the complete time series dataset into the initial LSTM model for training, and uses the self-gating mechanism of LSTM to mine the internal temporal correlations and deep features of the data. After completing one round of LSTM training, the sample prediction errors are statistically calculated, and the sample weights are dynamically adjusted according to the core rules of Adaboost, increasing the weight values of samples with larger prediction deviations [10]. Then, multiple groups of LSTM models with similar structures are successively constructed. Each group of models is trained based on the updated sample weights, fully focusing on the sample patterns that previous models failed to accurately fit. The algorithm assigns independent weights to each LSTM sub-model in each round, determines the contribution ratio based on the prediction accuracy of each model, and the training process continues to iterate until the set number of rounds is reached and stops. Finally, the output results of all LSTM sub-models are integrated, and the final prediction value is generated through a weighted combination method.

4. Result

This project sets the proportion of the training set in the dataset to 0.7, the number of weak regressors to 10, the number of hidden layer nodes to 6, the maximum training iterations to 500, the initial learning rate to 0.001, the learning rate decay factor to 0.1, the learning rate decay period to 40, and the prediction error adjustment threshold to 0.1.

A comparative analysis using multiple machine learning algorithms was conducted, and the results are shown in Table 1.

Table 1. The results of the comparative experiment

Model	Accuracy	Recall	Precision	F1	AUC
CatBoost	0.691	0.691	0.667	0.675	0.756
Decision tree	0.613	0.613	0.594	0.602	0.629
AdaBoost	0.683	0.683	0.655	0.65	0.74
Random forest	0.691	0.691	0.648	0.636	0.77
KNN	0.606	0.606	0.574	0.582	0.628
GBDT	0.665	0.665	0.635	0.637	0.721
ExtraTrees	0.686	0.686	0.65	0.628	0.762
LightGBM	0.642	0.642	0.621	0.628	0.699
XGBoost	0.644	0.644	0.608	0.614	0.708
LSTM-Adaboost	0.855	0.855	0.879	0.843	0.938

A bar chart comparing the performance indicators of various machine learning algorithms is presented, as shown in Figure 4.

DOI: 10.54254/2755-2721/2026.35561

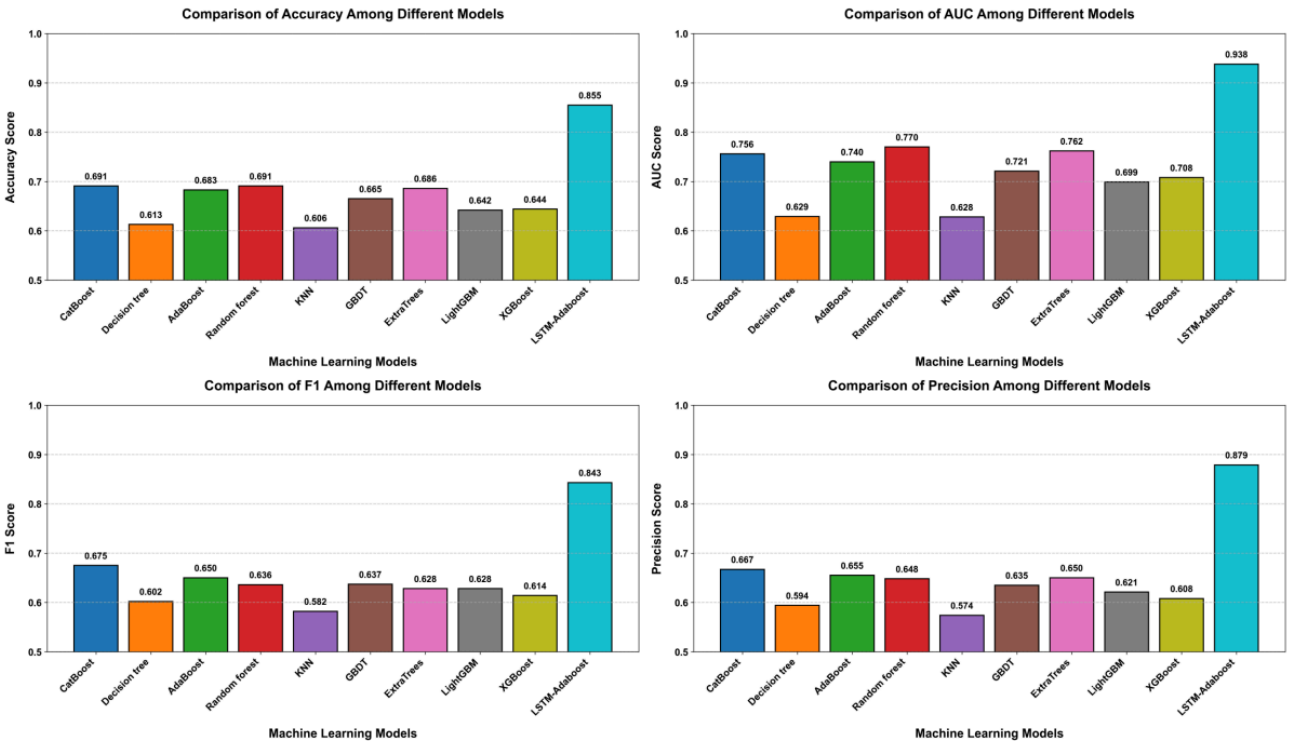

Figure 4. The comparison bar charts of each indicator

The LSTM-Adaboost algorithm proposed in this paper significantly outperforms traditional machine learning algorithms such as CatBoost, Decision Tree, AdaBoost, Random Forest, KNN, GBDT, ExtraTrees, LightGBM, and XGBoost in terms of accuracy, recall rate, precision, F1 score, and AUC. The values of all indicators of this algorithm are above 0.855, and the AUC is as high as 0.938. It possesses stronger classification recognition ability and generalization performance. The indicators of traditional machine learning models generally fall within the range of 0.606 to 0.770. Among them, Random Forest and CatBoost have relatively better overall performance. KNN and Decision Tree have the lowest overall performance among all compared models. The other ensemble learning algorithms can only achieve moderate classification results. In contrast, LSTM-Adaboost effectively compensates for the shortcomings of traditional machine learning algorithms in deep feature mining and sample weight optimization by relying on the temporal feature capture ability of the Long Short-Term Memory network and the weighted integration advantage of the AdaBoost algorithm. The evaluation dimensions are significantly separated, fully demonstrating the superiority and effectiveness of the proposed algorithm in classification tasks.

5. Conclusion

The parole system plays a crucial role in the execution of sentences and the reintegration of criminals into society. Traditional manual assessment is prone to be influenced by subjective factors, and the accuracy of risk identification and determination is difficult to meet the demands of intelligent judicial supervision. Traditional machine learning methods also have the drawbacks of insufficient feature extraction and insufficient prediction stability. The LSTM-Adaboost algorithm proposed in this study combines the time series feature extraction ability of the long short-term memory network and the integrated optimization advantages of the adaptive boosting algorithm, effectively addressing the limitations of a single model. Experimental results show that this

DOI: 10.54254/2755-2721/2026.35561

algorithm significantly outperforms traditional algorithms such as decision trees, KNN, AdaBoost, random forest, GBDT, XGBoost, LightGBM, ExtraTrees, and CatBoost in terms of various evaluation indicators. The comparison model indicators are mostly between 0.606 and 0.770, while the accuracy, recall rate of LSTM-Adaboost reach 0.855, precision rate is 0.879, F1 score is 0.843, and the AUC value is as high as 0.938. The overall classification performance and generalization ability have been significantly improved. This research provides a scientific and quantitative technical path for parole risk assessment, which can assist judicial personnel in making more accurate judgments on the risk of reoffending, unify assessment standards, improve parole approval efficiency and credibility, facilitate the implementation of the lenient and strict criminal policy, and promote the development of social execution and judicial supervision towards an intelligent and refined direction.

From a legal perspective, the study on the convergence round prediction of deep learning training based on machine learning algorithms examines the multiple legal dimensions such as data compliance, intellectual property protection algorithm responsibility and technical ethics. The research uses multiple types of features such as model complexity, learning rate, GPU memory utilization to construct the prediction data set, and must strictly follow the relevant regulations of the Data Security Law, Personal Information Protection Law, and the Interim Measures for the Management of Generative Artificial Intelligence Services to ensure that the training data sources are legal, the ownership is clear, and unauthorized use of intellectual property protected data resources is avoided, to prevent infringement of others' legal data rights and copyrights. The proposed HLOA-CNN-BiGRU composite algorithm is a technological innovation achievement. It can be protected through the patent system for the algorithm architecture and model design, and the responsibility boundary in the algorithm application should be clearly defined. When prediction errors lead to computing power waste, training anomalies or improper resource allocation, etc., the civil liability of the developer and user should be determined according to the fault liability principle of the Civil Code. This technology is aimed at improving the efficiency of deep learning training and resource optimization, has significant scientific research and industrial value, and the research and implementation process should adhere to the principles of technical neutrality and fairness and transparency, improve the algorithm filing and result traceability mechanism, balance the relationship between technological innovation and legal regulation, and enhance the legal risk defense line while improving the model training efficiency, promoting the sustainable and healthy development of artificial intelligence technology on a legal and compliant track.

References

[1] Balaji, A. J., et al. (2025). A novel approach to faster convergence and improved accuracy in deep learning-based electrical energy consumption forecast models for large consumer groups. *IEEE Access, 13*, 15090-15157.

[2] Zhang, C., et al. (2024). Distributed deep reinforcement learning-based gradient quantization for federated learning enabled vehicle edge computing. *IEEE Internet of Things Journal, 12*(5), 4899-4913.

[3] Tejani, G. G., Sadaghat, B., & Kumar, S. (2023). Predict the maximum dry density of soil based on individual and hybrid methods of machine learning. *Advances in Engineering and Intelligence Systems, 2*(3), 95-106.

[4] Gao, C., & Wang, D. (2023). Comparative study of model-based and model-free reinforcement learning control performance in HVAC systems. *Journal of Building Engineering, 74*, 106852.

[5] Nematzadeh, S., et al. (2022). Tuning hyperparameters of machine learning algorithms and deep neural networks using metaheuristics: A bioinformatics study on biomedical and biological cases. *Computational Biology and Chemistry, 97*, 107619.

[6] Di, Y., et al. (2025). Fedrl: A reinforcement learning federated recommender system for efficient communication using reinforcement selector and hypernet generator. *ACM Transactions on Recommender Systems, 4*(1), 1–31.

DOI: 10.54254/2755-2721/2026.35561

[7] Li, Y., et al. (2022). Probabilistic charging power forecast of EVCS: Reinforcement learning assisted deep learning approach. *IEEE Transactions on Intelligent Vehicles, 8*(1), 344–357.
[8] Wu, Q., et al. (2022). Mobility-aware cooperative caching in vehicular edge computing based on asynchronous federated and deep reinforcement learning. *IEEE Journal of Selected Topics in Signal Processing, 17*(1), 66–81.
[9] Kumar, V., et al. (2024). Unified deep learning models for enhanced lung cancer prediction with ResNet-50–101 and EfficientNet-B3 using DICOM images. *BMC Medical Imaging, 24*(1), 63.
[10] Wang, Y., et al. (2023). Coverage path planning for kiwifruit picking robots based on deep reinforcement learning. *Computers and Electronics in Agriculture, 205*, 107593.