Proceedings of CONF-SEML 2026 Symposium: Computational Analysis and Modeling in Complex Intelligent Systems
DOI: 10.54254/2755-2721/2026.GU35039

Robot Compliance Control via Multimodal Perceptual Fusion

Xinyi Tian

College of Mechanical and Electrical Engineering, Beijing Information Science & Technology University, Beijing, China
angelatianmmtxy@163.com

Abstract. With the rapid development of intelligent robots, their use in aid in the fields of medicine, home services, and industry collaboration has grown steadily. This has focused most of the research on ensuring safe, secure, and efficient interaction between robots, humans, and the environment. Among multiple interaction safety mechanisms, compliance control is targeting the safe and injury-free interaction of robots with people and the environment by modulating the velocity and force of robots during the interaction. As an important supportive system, multimodal perception fusion, integrates visual, tactile, and force information to predict contact states and/or assist in making compliant control decisions. The value in several applications, such as medical intervention, industrial assembly, and service robotics, is described in this paper, to explain the use case of compliance control, and to provide a foundation of intelligence embodied research on intelligent robotic interaction technology implementation of compliance control in smart robotic interaction technologies.

Keywords: intelligent robots, compliance control, multimodal perception fusion, embodied intelligence, safe human-robot interaction

1. Introduction

Embodied intelligence is a new concept in artificial intelligence and robotics, developing in recent years. It transcends the constraints of conventional intelligence research that focuses too much on algorithms and ignores physical interaction and redefines the nature of intelligence: intelligence is a process where an agent constantly engages with the environment via a physical body, and learns, adapts and makes decisions based on dynamic feedback. This offers a new theoretical basis to the technology of interaction with robots. The typical technical embodiment of embodied intelligence is compliance control. Its essence lies in the active or passive adaptation of the motion of the robots when they are in contact with the environment, preservation of the contact force within the safe range and prevention of the damage of equipment and the human-robot safety hazards associated with the hard collisions. Under the view of embodied intelligence, compliance control is achieved through three fundamental aspects: physical properties of the body, where elastic material and flexible structure absorb impact energy; contact state perception, which is accurate measurement of magnitude, position and direction of contact force; responsive decision-making, which is rapid generation of retraction or adaptive propulsion based on sensory data. Multimodal perception fusion

© 2026 The Authors. This is an open access article distributed under the terms of the Creative Commons Attribution License 4.0 (https://creativecommons.org/licenses/by/4.0/).

DOI: 10.54254/2755-2721/2026.GU35039

is an important technical method between mechanical structure and the implementation of control. It incorporates multi-source information, such as tactile, visual and force sensing, to create a holistic perception system of environmental interaction, and thus offers the necessary support to compliance control. Through a combination of physical principles of compliance control and a discussion of multimodal perception fusion techniques, the work offers theoretical support and technical guidance to safe and adaptive human-robot interaction in complex unstructured environments and facilitates the paradigm shift of robots as precision execution devices to intelligent interaction devices.

2. Theoretical framework of embodied intelligence and compliance control

2.1. Core of embodied intelligence: body, environment, and interaction

Embodied intelligence emphasizes that there would be no intelligence without a physical body. Its nature is real time communication between an agent and the environment through a physical object, the ongoing learning and adaptation in the closed loop, perception-decision-action. This paradigm plays with the disembodied constraint of conventional artificial intelligence and views intelligence as the joint evolution of body, environment, and algorithm. The body is not a vessel of intelligence but a constituent part: the arrangement, the stuff, the sensory capacities of a body define the way an agent perceives and acts in the world.

Soft robotics is synonymous with embodied intelligence as they both seek to produce more natural and effective robotic behaviors using physical morphology and smart interaction. Relevant research generally involves embodied morphological computation, the evolution of embodied AI, and perception, control, and decision-making in soft robots. In embodied intelligence paradigm, the design and control of soft robots rely not only on algorithms and data processing but also on physical morphology and material properties, which altogether allow robots to naturalistically and adaptively interact with the environment. As an example, compliant knees are a mechanical response that corrects small topographical changes during walking without the central nervous system; finger compliance is a passive response that adapts to object shape during grasping, but each joint is not controlled consciously. This bodily intelligence forms the essence of embodied intelligence. Embodied intelligence theory considers body, environment, and interaction to be a single entity, and this approach provides a new theoretical approach to robotic compliance control. Morphology is not merely a carrier: physical characteristics of the body are a significant part of intelligence. Robotic compliant behaviors cannot be understood alone at the algorithmic level but have to be perceived through body-environment interaction.

2.2. Compliance control as a typical paradigm of embodied intelligence

Control of compliance has to do with how robots adjust their motion states to control contact forces. Doing this helps them complete tasks while keeping contact forces within certain limits. From this perspective of embodied intelligence, compliance control illustrates the relationship between the body, the environment, and the interaction of the three. The first and second layers of this relationship both involve control of the body's compliance. The first layer, control of the body's compliance, means the body's compliance relies on its physical characteristics, such as the body's ability to use its materials' elasticity to absorb contact energy. The second layer, control of the body's compliance, means the body relies on sensing the state of contact. The authors in a review in the journal Advanced Science state that, to estimate and self-adhere, the body uses a combination of efficient shape and contact sensing systems of multiple types. The third layer, control of the body's

DOI: 10.54254/2755-2721/2026.GU35039

compliance, means the body as a control capability and the environment as a containment field of control capability, control and compliance of the body, and trade off control and absences. The body and the environment together are self-control of absences. When studying control of compliance in the context of embodied intelligence, this relationship has to do with the body, physical sensing, constraints of the environment, and the purpose of the task [1].

2.3. Constraints and enabling effects of body structure on compliant behaviors

Structural properties of a robot both restrict and enable compliance control. Properties constrain the robot's workspace and modes, while the design provides rational characteristics to the robot. Della Santina, Duriez, and Rus assessed the advancements and control challenges of soft robot models, stating designers need to build a thorough understanding to design interaction and motion control systems for soft robots. The review shows that body structures control more than just motion, providing the reaction mechanism to the imagined and sustained interactions, keeping control and order to the environment. It provides the means for the body to process information. Robots compare the interaction and deformation to the imagined system and extract control information, without external complex sensing systems. The body structures give a comparison mechanism explaining the interaction sustained through physical deformation. A well-designed control system provides the robot with more intelligent and rational support, managing to exploit physical constraints to the structures traits [2].

3. Multimodal perceptual fusion technology

3.1. Tactile perception: contact force and distribution measurement

Compliance control relies on tactile perception as the primary sensing modality. Robots perceive interaction conditions with the environment by measuring the location, magnitude, and distribution of contact forces. This information is necessary for formulating compliant responses. Soft Inductive Bimodal Sensor (SIBS) is a novel type of sensor developed by Peng et al. that utilizes only two wires to accomplish bending and force sensing in both directions simultaneously, based on the strain-modulated permeability and the eddy current phenomena. The sensor is made of a flexible planar coil, porous ferrite film, and a soft conductive film. The bending angle and the bending force can be decoupled and observed through inductance measured at two different frequencies. SIBS demonstrates high resolution, a fast-imaging response, excellent repeatability, and high durability. A soft crawling robot with SIBS can sense its own shape and amend its response accordingly. This research has advanced the frontier of flexible sensing applied to the proprioception and tactile perception of soft machines and has constructed a hardware basis for the integration of multimodal perception [3].

3.2. Force perception: real-time multi-dimensional force detection

Force perception complements tactile sensing and jointly forms the perceptual basis of compliance control. Force sensors are typically mounted at robot joints or end-effectors to measure overall loading conditions. Wang et al. proposed a predictive body-awareness framework for soft robots based on a Bayesian variational autoencoder that fuses multimodal sensory data, thereby improving latent body-state estimation and predictive perception of robot deformation [4]. This study collected grasping dynamics data from a soft gripper equipped with multimodal perception. By combining

DOI: 10.54254/2755-2721/2026.GU35039

current states and image differences, the forward model predicts physical interactions and motions of the soft gripper in image streams. Integrating Bayesian deep learning with multimodal fusion provides an innovative approach to body-awareness modeling for soft robots [4].

3.3. Visual perception: pre-contact environmental cognition

Visual perception functions as a predictive component in compliance control. By perceiving environmental and target object information in advance, robots plan reasonable contact strategies to avoid unexpected collisions. Demir et al. proposed a learning framework for soft millirobots that combines multimodal locomotion learning with sim-to-real transfer, enabling efficient transfer of learned motion strategies from simulation to physical robots [5]. They developed a data-driven simulation environment for magnetic soft millirobots, learned periodic magnetic actuation signals in simulation, and deployed the learned motion policy to the physical world using Bayesian optimization and Gaussian processes. This work highlights the significance of visual perception and environmental cognition in autonomous adaptation of soft robots, offering a technical route for pre-contact prediction in compliance control [5].

3.4. Fusion and complementation of multi-source information

Pursuing multimodal perceptual fusion means that there is integration of several different modalities in a perceptual process of sensing, which means there is a more reliable sense of perception than there would be by a single sensor. Zhao and his colleagues agree that multimodal fusion is beyond simple incorporating of several modalities, and that it is collaboration for perception of the complementary characteristics of different modalities. Robotics receive substantial perceptual information when the information is undertaken by the optimal product of precisely incorporated and completely synergic compliance control [6].

4. Compliance control strategies

4.1. Impedance control: simulating spring-mass-damper systems

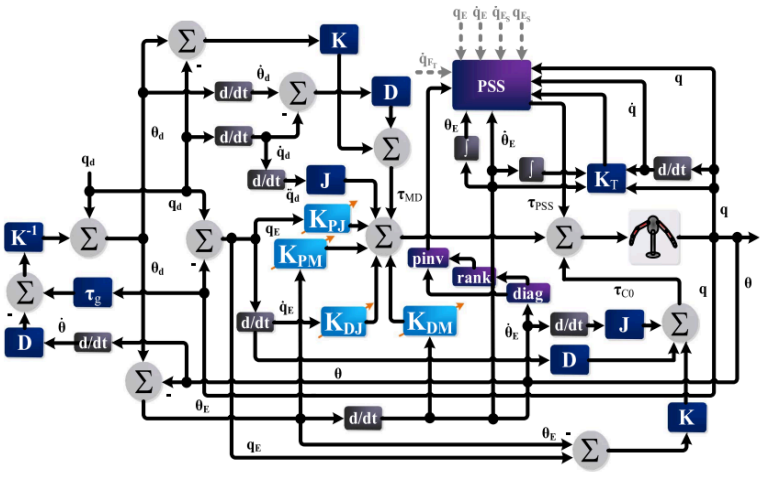

Figure 1. Block diagram of the UMVIC scheme [7]

DOI: 10.54254/2755-2721/2026.GU35039

One of the most traditional methods of compliance control is impedance control. Its fundamental concept is to impart robots with the desired dynamic behaviors that are like those of a springmassdamper system during contact with the environment. The contact forces are not directly controlled, but instead the impedance controls robot dynamics: when the robot is deformed by external forces, it does not follow the nominal trajectory, but the amount of deviation is dictated by the predetermined stiffness and damping parameters. Nevertheless, traditional variable impedance control can cause instability during some of the working stages, which can jeopardize interaction safety. Spyrakos-Papastavridis and Dai suggested a variable impedance control scheme that uses power-shaping signals and partial knowledge of link-side dynamics to control a flexible-joint robot during interaction with its surroundings and in tracking control. The overall structure of the UMVIC scheme is shown in Figure 1. The novelty of the key is that the control is achieved by means of partial joint-side dynamic knowledge only, without any calculation of the complicated Coriolis forces and inertia matrices, and with a much-decreased computational cost; and system stability is achieved through power-shaping signals, giving flexible-joint robots both trajectory tracking and interaction properties. The experimental validation on a flexible-joint robot platform reveals that the proposed scheme not only improves the accuracy of trajectory tracking but also provides interaction safety. This research shows the amount to stabilize the control of variable impedances: to inhibit the potentially unstable energy injection through power-shaping signals. This scheme provides critical technical support of flexible-joint robots in human-robot interaction conditions and has more efficient and stable variable interaction compared to fixed-parameter impedance control [7].

4.2. Hybrid force/position control: separate regulation of force and position

Hybrid force/position control splits the task space into two subspaces: position control and force control. When using this control method, position control means the robot adheres to a specific trajectory. Force control means the robot preserves a certain contact force. This control method needs the task requirements to use both artificial and natural constraints. It separates the control task into two subspaces, force and position, and describes this separation with a matrix. This method is applied to tasks such as construction and polishing that demand both force and position regulation.

Hybrid force/position control is more complicated with the use of soft robots. Polygelines et al. reviewed the control and sensing methods of soft robots that use fluid in their joints. They reviewed the soft robots with organic elastomers, which help to soften the robot and display more complicated behaviors when the robot contacts a human. Many control methods have been devised, both involving prediction and learning, to help with the creation of force and position control aims on the soft robots. Resolving hybrid force/position control allows the decomposition of control tasks to help regulate control. The review described the main issue in control of soft robotics to be non-linearity. This complicated control of soft systems, which makes the separation of force and position control subspace substantially more complex, requires a more complex control with coordination of force and position through multiple systems of control and sensors [8].

4.3. Adaptive compliance control: environmental perception and parameter adjustment

Adaptive compliance control aims to update methods for controlling compliance that stay within goal constraints even as modifying contact states/environment conditions occur. The ability to monitor and adjust methods for controlling compliance that stay within goal constraints as modifying contact states and changes occurs was especially aided by the transfer of control to the designer. Control of the designer was largely impacted by three areas of artificial intelligence. These

DOI: 10.54254/2755-2721/2026.GU35039

three areas have multiple forms of learning and data abstraction methods, and modeling that employs control of methodologies from one specific area of artificial intelligence to another. One of the areas examined the role of data and provided a multiple control level framework. The framework included control of soft robots. The potentially infinite degrees of control and the challenges presented control modeling based on methods. Based on control modeling and all potential learning forms, the author presented a control framework that redefined control. The control outlined sophisticated data-driven architecture for soft robotics and provided a foundation for a framework based on control of soft robotics to withstand nonlinear control of soft robotics. These methods provide a useful framework for modeling, learning, and controlling nonlinear soft robotic systems [9].

5. Application scenarios and prospects

5.1. Precise force control and safe interaction in medical robots

Compliance control is crucial for one field of application of medical robotics: the bronchi and cerebral vasculature. These body parts' intraluminal structures are narrow and extremely tortuous, and robotics and micro-nanoscale interventional procedures are needed for the bronchi and cerebral vasculature. Liu et al. built a magnetically controlled micro robotic system for programmable stiffness tuning and active steering of microcatheters [10]. Liu's system may be integrated with commercial microcatheters that are no larger than 300 μm. Liu's system explicitly enables active steering and microscale stiffness adjustment. The same team conducted in vivo animal experiments of bronchial dual-modal imaging-guided magnetic navigation with active microcatheter and targeted drug delivery. The team verified the system's in vivo feasibility and system safety. The team's research builds the foundation for new, innovative system engineering for advanced minimally invasive interventions in narrow and tortuous body lumens.

5.2. Assembly and grinding in industrial collaborative robots

Industrial collaborative robots work alongside humans, making compliance control critical. Duan et al. studied the multimodal perception, fusion, and control of human-robot collaboration methods in manufacturing, stating that collaboration efficiency and work safety can be improved with the integration of perceptual modalities (vision, hearing, and touch) [11]. Collaborative robots use the precision and strength of robots with the flexibility and dexterity of humans to take over the highly repetitive and risky tasks that humans perform in manufacturing. Nevertheless, improvement and seamless human–robot interaction is still needed in terms of adaptability, safety, decision-making, and robustness in dynamic environments. The paper suggested that integrating vision and hearing with touch and other perception systems would improve robotics perception and decision-making and would provide a basis for creating more seamless and practical human-robot interaction techniques [11].

5.3. Compliant grasping and human–robot contact in service robots

Service robots encounter unstructured areas in homes and public places and have frequent physical contact with users. Compliant grasping and compliant interaction enable robots to handle fragile items. Lyu et al. proposed a humanoid finger characterized by a rigid-flexible-soft structure, demonstrating this structure to have a stronger force output while achieving compliant interaction

DOI: 10.54254/2755-2721/2026.GU35039

with objects. The structure mixes a soft surface with a flexible joint and rigid support, high load capacity, and stability, with human-like compliant interacting output forces. This finger, combined with a gripper, reliably grasped objects varying in mass, hardness, shape, and size, making 20 consecutive non-destructive grasps of tofu and chips, even in differing orientations. The evidence supports the practice of advancing rigid-flexible-soft architectures in service robot end-effectors, while the Lap finger provides support that compliant grasping end-effectors in service applications that require both safe interaction with objects and stable grasping [12].

5.4. Future development: humanoid compliance and learning integration

Humanoid compliance is based on the essence of organic combination of the properties of the physical body and the intelligent control methods. On the one hand, based on the human muscle-tendon system, flexible actuators with controllable stiffness and damping are developed to provide the robots with compliance on the hardware level. Conversely, reinforcement learning, imitation learning, and others allow robots to learn and optimize compliant policies independently by interacting with the environment. There are several challenges with integrating learning and compliance. To begin with, safety should be matched with exploration efficiency since, during learning, robots can perform risky tasks and, thus must have explicit safety limits when experimenting with new policies. Second, the externalization of compliant behaviors is unclear particularly when the policies trained on training data are practiced in new settings, objects, and disturbance types. Third, it requires multi-task and transfer learning to make robots learn new skills quickly based on the existing compliant abilities.

As the embodied intelligence theory is further developed and artificial intelligence is advanced, humanoid compliance and learning will be integrated such that breakthroughs are likely to be made in various areas. These are: the move to single skill learning to accumulation and transfer, the move to passive compliance to active compliance and the move to individual to collective learning between multiple robots. These developments will push robots out of the lab into more real-world applications, and will have more roles in medical, industrial, domestic, and other applications.

6. Conclusion

This paper explores robotic compliance control through the lens of embodied intelligence, focusing on the roles of physical modeling and multimodal perceptual fusion. The paper demonstrates the link between embodied intelligence and compliance control, revealing that compliance control is paradigm of body–environment interaction. This paper reviews the three main modalities in robotic compliance control: tactile, force, and visual sensing. The paper discusses braided, seamless control, and Adaptive compliance Control offers approaches in compliance control. The paper explores the Integrated Control of compliance in medical interventional robots, robotic collaborative work in factories, and production service robots. The ultimate integration of the robotic body framework, Control, and the Sensory Structure enables the compliance control of robots. The paper outlines unified integration.

References

[1] Wang, H., Totaro, M., & Beccai, L. (2018). Toward perceptive soft robots: Progress and challenges. Advanced Science, 5(9), Article 1800541. https: //doi.org/10.1002/advs.201800541

[2] Della Santina, C., Duriez, C., & Rus, D. (2023). Model-based control of soft robots: A survey of the state of the art and open challenges. IEEE Control Systems Magazine, 43(3), 30–65. https: //doi.org/10.1109/MCS.2023.3253419

DOI: 10.54254/2755-2721/2026.GU35039

[3] Peng, Y., Wu, H., Wang, Z., Wang, Y., & Wang, H. (2024). A soft inductive bimodal sensor for proprioception and tactile sensing of soft machines. Soft Robotics, 11(6), 1055–1067. https: //doi.org/10.1089/soro.2023.0249
[4] Wang, S., Liu, D., Fu, C., Yuan, X., Li, K., & Feng, Y. (2025). Predictive body awareness in soft robots: A Bayesian variational autoencoder fusing multimodal sensory data. IEEE Transactions on Robotics, 41, 5663–5678. https: //doi.org/10.1109/TRO.2025.3610170
[5] Demir, S. O., Tiryaki, M. E., Karacakol, A. C., & Sitti, M. (2024). Learning soft millirobot multimodal locomotion with sim-to-real transfer. Advanced Science, 11(30), Article 2308881. https: //doi.org/10.1002/advs.202308881
[6] Zhao, Z., Wu, Q., Wang, J., Zhang, B., Zhong, C., & Zhilenkov, A. A. (2024). Exploring embodied intelligence in soft robotics: A review. Biomimetics, 9(4), Article 248. https: //doi.org/10.3390/biomimetics9040248
[7] Spyrakos-Papastavridis, E., & Dai, J. S. (2024). A variable impedance scheme based on power-shaping signals and partial knowledge of link-side dynamics for flexible-joint robot interaction and tracking control. IEEE/ASME Transactions on Mechatronics, 29(1), 588–601. https: //doi.org/10.1109/TMECH.2023.3287789
[8] Polygerinos, P., Correll, N., Morin, S. A., Mosadegh, B., Onal, C. D., Petersen, K., Cianchetti, M., Tolley, M. T., & Shepherd, R. F. (2017). Soft robotics: Review of fluid-driven intrinsically soft devices; manufacturing, sensing, control, and applications in human-robot interaction. Advanced Engineering Materials, 19(12), Article 1700016. https: //doi.org/10.1002/adem.201700016
[9] Chen, Z., Renda, F., Le Gall, A., Mocellin, L., Bernabei, M., Dangel, T., Ciuti, G., Cianchetti, M., & Stefanini, C. (2025). Data-driven methods applied to soft robot modeling and control: A review. IEEE Transactions on Automation Science and Engineering, 22, 2241–2256. https: //doi.org/10.1109/TASE.2024.3377291
[10] Liu, Y., Huang, J., Zhao, X., Chen, X., Bai, L., Li, R., Xu, M., & Xu, H. (2026). Magnetically controlled microrobotic system for programmable stiffness tuning and active steering of microcatheters. Nature Communications, 17, Article 916. https: //doi.org/10.1038/s41467-026-55680-8
[11] Duan, J., Zhuang, L., Zhang, Q., Zhou, Y., & Qin, J. (2024). Multimodal perception-fusion-control and human–robot collaboration in manufacturing: A review. The International Journal of Advanced Manufacturing Technology, 132(3–4), 1071–1093. https: //doi.org/10.1007/s00170-024-13385-2
[12] Lyu, B., Xiao, H., Meng, Q., Wu, J., Wang, Y., She, J., & Fukushima, E. F. (2025). Humanoid finger with rigid-flexible-soft structure. Nature Communications, 16, Article 9905. https: //doi.org/10.1038/s41467-025-65367-x