Proceedings of the 4th International Conference on Mechatronics and Smart Systems
DOI: 10.54254/2755-2721/2026.34903

Research Progress on Preparation and Supercapacitor Application of Zinc Cobaltate Materials

Jiru Zou

School of Life and Environmental Sciences, Minzu University of China, Beijing, China
3313299057@qq.com

Abstract. Efficient electrical energy storage is a core technology supporting the development of portable electronic devices, electric vehicles and other industries. Featuring high power density and long cycle life, supercapacitors fill the performance gap between traditional capacitors and batteries, thus attracting widespread attention. Among all components, electrode materials are the key factors determining the performance of supercapacitors. Zinc cobaltate ($ZnCo_2O_4$) possesses a stable spinel structure and the bimetallic synergistic effect of zinc and cobalt. It can provide abundant redox active sites and delivers a high theoretical specific capacitance, making it a promising pseudocapacitive material. Nevertheless, pure-phase $ZnCo_2O_4$ still suffers from insufficient electrical conductivity and structural degradation during cycling. To solve these problems, researchers mainly adopt morphology regulation and composite modification to improve its electrochemical performance. Typical strategies include constructing flower-like microspheres, nanorod arrays and other structures, or combining $ZnCo_2O_4$ with reduced graphene oxide, metal hydroxides and other materials to optimize electron/ion transport capacity and structural stability. Relevant studies have proved that $ZnCo_2O_4$-based electrodes exhibit high specific capacitance in the three-electrode system. When assembled into asymmetric supercapacitors, the devices also achieve high energy density and favorable cycling stability. Overall, benefiting from its structural advantages, tunable morphology and great potential for composite modification, $ZnCo_2O_4$ has broad application prospects in next-generation high-performance supercapacitors. This review systematically summarizes the energy storage mechanism of supercapacitors and the research progress of $ZnCo_2O_4$-based electrode materials, aiming to provide references for the design of high-performance energy storage devices.

Keywords: Zinc cobaltate materials, material preparation, supercapacitors, application progress

1. Introduction

Efficient and safe electrical energy storage has become an important research topic for the development of modern science and technology. With the rapid advancement of portable electronic devices, electric vehicles and grid-connected renewable energy technologies, the demand for high-performance energy storage systems keeps growing. Supercapacitors combine relatively high power density and moderate energy density, and bridge the performance gap between traditional dielectric

© 2026 The Authors. This is an open access article distributed under the terms of the Creative Commons Attribution License 4.0 (https://creativecommons.org/licenses/by/4.0/).

DOI: 10.54254/2755-2721/2026.34903

capacitors and secondary batteries, which makes them widely concerned [1, 2]. At present, researchers primarily enhance the energy density of supercapacitors by optimizing electrode materials and device structures [3-5]. However, supercapacitors still face multiple challenges, including unsatisfactory energy density, limited long-term cycling stability, as well as difficulties in cost control and performance consistency during large-scale production [6-8]. Among various electrode materials, zinc cobaltate ($ZnCo_2O_4$) has a stable spinel structure. The cobalt ions can undergo redox reactions with multiple valence states, and zinc ions can inhibit lattice expansion. These characteristics endow $ZnCo_2O_4$ with high theoretical specific capacitance and good cycling tolerance, which are superior to single metal oxide systems [9, 10]. Its intrinsic advantages make it possible for supercapacitors to realize both high power output and large energy storage capacity [11, 12]. This paper reviews the research progress of supercapacitors, analyzes the application advantages of $ZnCo_2O_4$ in this field, and prospects its future development directions and existing challenges, so as to offer references for follow-up research on high-performance supercapacitors.

2. Supercapacitors and their energy storage devices

2.1. Brief introduction to supercapacitors

Supercapacitors are emerging electrical energy storage components. Different from traditional batteries, supercapacitors have larger capacitance, higher power density, longer service life, better stability, durability and catalytic activity. They fill the performance gap between traditional dielectric capacitors and secondary batteries, and deliver high power as well as considerable energy density [13-15].

In terms of device engineering, supercapacitors are developing toward flexibility, wearability and miniaturization to meet the demands of next-generation electronic equipment [16]. Researchers have fabricated fibrous and miniature supercapacitors by combining carbon cloth, laser-induced graphene, 3D printed electrodes and other technologies [17-19]. Meanwhile, multi-functional integration has become a major development trend. Such devices can be coupled with triboelectric nanogenerators, photocharging technologies [20-22] or sensing functions [23, 24] to build self-powered intelligent systems. For portable and implantable applications, biocompatibility, anticoagulant properties [25], green synthesis methods and biomass-derived carbon materials have also drawn increasing attention [26].

2.2. Energy storage devices of supercapacitors

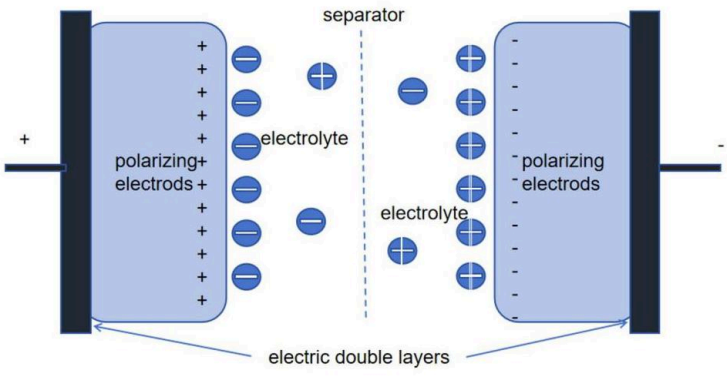

Figure 1. Schematic diagram of energy storage device of supercapacitors

DOI: 10.54254/2755-2721/2026.34903

The energy storage of supercapacitors involves both physical processes and electrochemical structures, and the whole device is composed of micro material configurations and macro integrated structures. Electrode materials, electrolytes, separators and current collectors are the key components of supercapacitors [27, 28].

Figure 1 illustrates the basic structure and energy storage mechanism of supercapacitors. When an external voltage is applied, positive and negative electrodes adsorb ions with opposite charges respectively, forming an electric double layer at the electrode-electrolyte interface. The separator prevents direct contact between electrodes, and the electrolyte provides channels for ion transport. This energy storage process is mainly physical without obvious chemical reactions, so supercapacitors can achieve a long cycle life.

Supercapacitors are mainly divided into two categories according to structures: electrochemical double-layer supercapacitors and pseudocapacitive supercapacitors, and their working principles are slightly different [29].

From the perspective of microscopic mechanism, the theory of electric double layer lays the foundation for electrochemical double-layer capacitors (EDLC). According to the Stern modified model, solvated ions tightly adsorbed on the electrode surface form the inner Helmholtz layer, and a diffusion layer exists on the outer side. The two layers jointly determine the interfacial capacitance. Since the charge and discharge process only involves physical migration and rearrangement of ions without phase transition or chemical bond recombination inside electrodes, EDLCs generally possess high Coulombic efficiency and excellent cycling stability [30-32]. The capacitance of EDLCs is closely related to the electrochemical active surface area. Therefore, porous carbon materials such as activated carbon, carbon nanotubes and graphene are commonly used as EDLC electrode materials.

In contrast, pseudocapacitive supercapacitors rely on rapid and reversible Faradaic processes, namely electron transfer occurring on or near the electrode surface. When voltage is applied, electrolyte ions can intercalate into the lattice tunnels or interlayers of transition metal oxides such as RuO_2, MnO_2 and $ZnCo_2O_4$, accompanied by valence state changes of metal cations. For conducting polymers, the main reaction is anion doping and dedoping. As the reaction sites are concentrated on the shallow surface and the ion diffusion path is short, the kinetic characteristics are similar to those of capacitive devices [33-36]. The capacitance per unit area or per unit mass of pseudocapacitive electrodes is usually higher than that of pure EDLC electrodes. However, repeated Faradaic reactions will cause volume change and structural relaxation of electrodes, resulting in relatively shorter cycle life.

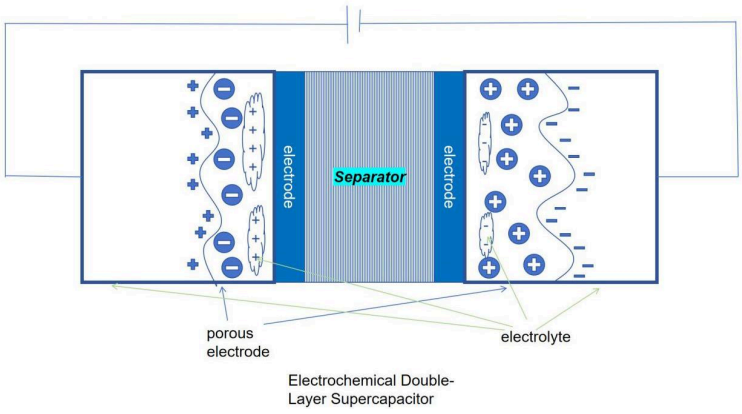

Figure 2. Structure diagram of electrochemical double-layer supercapacitor

DOI: 10.54254/2755-2721/2026.34903

As shown in Figure 2, electrochemical double-layer supercapacitors store energy mainly through physical electrostatic interaction. When porous electrodes are immersed in electrolyte and applied with voltage, the charges on the electrode surface attract counter ions, forming an electric double layer at the electrode-electrolyte interface to realize electrical energy storage [37, 38].

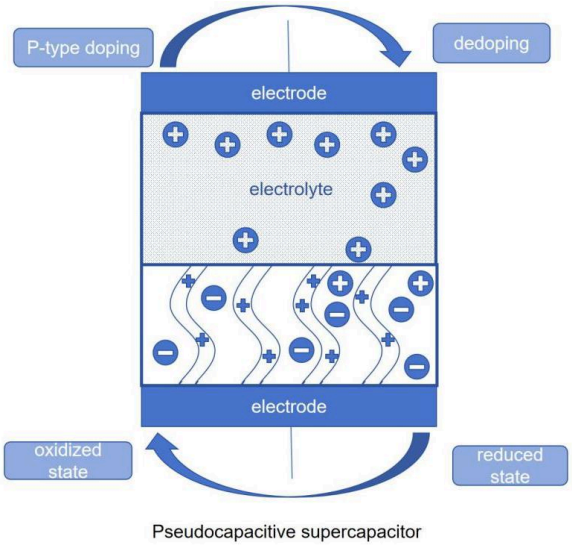

Figure 3. Pseudocapacitive supercapacitor

As shown in Figure 3, pseudocapacitive supercapacitors store energy based on rapid and reversible redox reactions. Charge transfer takes place on the surface of electrode materials, and ions continuously intercalate and deintercalate. The electrode potential changes with the amount of transferred charge, presenting strong capacitive characteristics. Their capacitance is generally higher than double-layer capacitance, while the cycle life is relatively shorter. Representative electrode materials include transition metal oxides and conducting polymers. The multi-valence properties of Ru, Mn, Ni, Co elements and the doping/dedoping process of polymers all contribute to pseudocapacitive behaviors.

3. Application and preparation of zinc cobaltate

3.1. Application of zinc cobaltate

Zinc cobaltate is a vital material for supercapacitors. It has a spinel structure and bimetallic synergistic effect, and combines the electrochemical activity of two transition metals cobalt and zinc. With a high theoretical specific capacitance, it is widely applied in pseudocapacitive and hybrid supercapacitors.

Table 1. Applications and comparison of zinc cobaltate in different fields

No.	Application Field	Specific Application	
1	Energy storage	Anode material for lithium-ion batteries	With the unique spinel structure, zinc cobaltate reacts with lithium ions through alloying reaction during charge and discharge. This property can improve the capacity and rate performance of batteries.
		Electrode material for supercapacitors	It has ultra-high specific surface area and good electrical conductivity. When used as supercapacitor electrode material, it can increase the power density of devices.

DOI: 10.54254/2755-2721/2026.34903

Table 1. (continued)

		Lithium-air batteries	Zinc cobaltate has catalytic activity, which can promote redox reactions and oxygen evolution reactions, and improve the energy efficiency of lithium-air batteries.
2	Composite reinforcement	Combining zinc cobaltate with carbon nanotubes can enhance the mechanical strength, electrical conductivity and functional performance of composite materials.	
3	Photocatalysis	As a wide-bandgap semiconductor, zinc cobaltate can be used for photocatalytic water splitting and photodegradation of organic pollutants.	

Zinc cobaltate has multi-dimensional application potential in the field of energy storage. When used as the anode material of lithium-ion batteries, its spinel structure provides three-dimensional channels for lithium ion intercalation and deintercalation, and improves specific capacity and rate performance via alloying reaction. As a supercapacitor electrode material, zinc cobaltate utilizes its large specific surface area and excellent electrochemical activity to accelerate interfacial charge transfer and raise the power density of devices. In lithium-air batteries, the active sites on its surface can also speed up oxygen reduction and oxygen evolution reactions, reduce overpotential and improve energy conversion efficiency.

Apart from direct energy storage applications, zinc cobaltate can also be used for composite reinforcement and photocatalysis. When compounded with highly conductive materials such as carbon nanotubes, it can construct a three-dimensional conductive network and improve electronic conductivity, mechanical strength and structural stability. As a wide-bandgap semiconductor, zinc cobaltate generates photogenerated electron-hole pairs under light irradiation, which participate in hydrogen production via water splitting and degradation of organic pollutants. It shows promising application prospects in environmental purification and clean fuel production.

3.2. Preparation of zinc cobaltate

Diversified methods have been developed to prepare zinc cobaltate, which are summarized in Table 2.

Table 2. Summary of preparation methods for zinc cobaltate

Preparation Method			References
Hydrothermal/ Water bath method	Dissolve zinc salt and cobalt salt in ethylene glycol or other solvents, add surfactants or chelating agents. After ultrasonic dissolution, transfer the solution into a reaction kettle for heating reaction. The products are obtained through centrifugation, washing, drying and high-temperature calcination.	$Zn(NO_3)_2·6H_2O + 2Co(NO_3)_2·6H_2O + 6NaOH \rightarrow ZnCo_2(OH)_6·xH_2O + 6NaNO_3 + 12H_2OZn(NO_3)_2·6H_2O + 2Co(NO_3)_2·6H_2O + 6NH_3·H_2O \rightarrow ZnCo_2(OH)_6·xH_2O + 6NH_4NO_3 + 12H_2OZnCo_2(OH)_6·xH_2O \rightarrow ZnCo_2O_4 + (2+x)H_2O$	[39]
Sol-gel method	Dissolve metal salts to form uniform sol, and generate gel through hydrolysis and condensation reactions. Finally, perform drying and high-temperature calcination.	1. Zinc source:$(Zn(NO_3)_2·6H_2O)$ 2. Cobalt source:$(Co(NO_3)_2·6H_2O)$ 3. Reducing agent:(C_2H_5OH) 4. Catalyst:$(C_6H_8O_7)$Reaction equation (complex formation):$Zn(NO_3)_2·6H_2O + 2Co(NO_3)_2·6H_2O + C_6H_8O_7 \rightarrow Zn(C_6H_4O_7)·2H_2O + 2Co(C_6H_4O_7)·2H_2O + 6HNO_3 + 4H_2OZn(NO_3)_2 + 2Co(NO_3)_2 + C_2H_5OH \rightarrow ZnCo_2O_4 + 6CO_2 + 8H_2O + 6N_2$	[40]

DOI: 10.54254/2755-2721/2026.34903

Table 2. (continued)

High-temperature calcination/Thermal decomposition method	Mix zinc oxide and tricobalt tetraoxide evenly by ball milling, and conduct long-time calcination at high temperature (600-900 °C).	$ZnO + Co_3O_4 \rightarrow 2ZnCo_2O_4$	[39]

The hydrothermal/water bath method is suitable for laboratory research and preparation of high-performance devices. By adjusting reaction conditions, researchers can obtain nanostructures with uniform size, regular morphology and large specific surface area. The high-temperature calcination method features simple procedures, low equipment requirements and low cost, so it is more applicable to large-scale industrial production. The sol-gel method achieves favorable component uniformity and structural controllability. It requires less sophisticated equipment than the hydrothermal method and produces materials with better performance than traditional thermal decomposition products. Thus, it has high application value in scientific research and medium-scale production.

If both high material performance and industrial scale-up are taken into consideration, the sol-gel method shows balanced potential. This method can maintain large specific surface area and high density of active sites, and it does not rely on high-pressure vessels, making it easy to connect with electrode production lines such as roll-to-roll coating and spray pyrolysis. In comparison, although the hydrothermal method can produce materials with excellent performance, the batch difference of autoclaves limits its large-scale application. The high-temperature calcination method has low cost, yet it is difficult to realize precise regulation of microstructures required by high energy density devices.

4. Research on performance of zinc cobaltate materials for supercapacitors

As mentioned above, zinc cobaltate can be synthesized with low cost and simple processes, and possesses desirable electrochemical properties. It shows advantages in multiple aspects including structural characteristics, morphology regulation, composite modification and device performance when applied to supercapacitors.

4.1. Advantages of zinc cobaltate in supercapacitors

Table 3 illustrates the energy storage advantages of zinc cobaltate from three perspectives: crystal structure, morphology regulation and device integration. The differentiated occupation of cobalt and zinc ions in the spinel lattice provides abundant redox active centers, and the bimetallic synergistic effect alleviates structural degradation. Morphology regulation can construct three-dimensional hierarchical structures to optimize ion transport and the utilization rate of interfacial active sites. The test results of asymmetric devices further verify its superior energy density and cycle life.

DOI: 10.54254/2755-2721/2026.34903

Table 3. Properties of zinc cobaltate and its application advantages in supercapacitors

Properties of Zinc Cobaltate	Application Advantages in Supercapacitors	References
$ZnCo_2O_4$ has a spinel cubic structure (space group: Fd3m). Cobalt ions and zinc ions occupy tetrahedral and octahedral sites respectively. The mixed valence states endow the material with abundant redox reaction sites, which facilitate Faradaic charge storage processes.	Compared with single metal oxides, the bimetallic synergistic effect improves electronic conductivity and relieves volume expansion during charge and discharge, so as to enhance cycling stability. All these improvements optimize the overall performance of supercapacitors.	[41]
The morphology of $ZnCo_2O_4$ can be regulated by different preparation methods, and optimized morphology contributes to better comprehensive performance.	Morphology exerts a significant influence on the electrochemical performance of $ZnCo_2O_4$. Studies prove that flower-like nanosheet microspheres of $ZnCo_2O_4$ prepared via a two-step hydrothermal-annealing method have larger specific surface area and smoother ion diffusion channels than ordinary nanosheets, thus delivering better electrochemical performance. In the three-electrode system, its specific capacitance reaches 3005.0 $F \cdot g^{-1}$ at the current density of 1 $A \cdot g^{-1}$. When the current density increases to 20 $A \cdot g^{-1}$, the specific capacitance still remains 2150.0 $F \cdot g^{-1}$ with a capacitance retention rate of 71.5% [41]. In addition, $ZnCo_2O_4$ nanorods grown on nickel foam also exhibit high specific capacity of 455.8 $C \cdot g^{-1}$ (about 1012 $F \cdot g^{-1}$). It further proves that constructing reasonable three-dimensional hierarchical structures helps improve the energy storage performance of $ZnCo_2O_4$.	[39, 41]
The $ZnCo_2O_4$//AC device achieves an energy density of 53.2 $Wh \cdot kg^{-1}$ at the power density of 1348.7 $W \cdot kg^{-1}$. The energy density of $ZnCo_2O_4$@$Ni(OH)_2$//AC device is further increased to 75.1 $Wh \cdot kg^{-1}$ at the power density of 1273.6 $W \cdot kg^{-1}$. Even at a high power density of 4675.3 $W \cdot kg^{-1}$, the $ZnCo_2O_4$@$Ni(OH)_2$//AC device still maintains an energy density of 57.3 $Wh \cdot kg^{-1}$.	When asymmetric supercapacitors are assembled with $ZnCo_2O_4$-based materials as the positive electrode and activated carbon as the negative electrode, the devices present a wide operating voltage window and excellent energy-power characteristics. In terms of cycling stability, the capacitance retention rate of $ZnCo_2O_4$ nanosheet microsphere electrodes reaches 93.8% after 10000 charge-discharge cycles. The capacity retention rate of composite structure devices ranges from 78.75% to 81% after 10000 cycles, showing favorable long-service-life performance on the whole.	[39]

4.2. Composite modification and synergistic enhancement effect

To break through the performance bottleneck of pure $ZnCo_2O_4$, researchers usually compound it with carbon materials or other active substances. Table 4 classifies typical $ZnCo_2O_4$ composite systems and their performance improvements.

$ZnCo_2O_4$@BC@AC composites take advantage of the conductive network and mechanical buffering effect of carbon materials. The material delivers a specific capacity of 47.2 $mAh \cdot g^{-1}$ at 0.5 $A \cdot g^{-1}$ with an equivalent series resistance of only 0.2 Ω, and retains 94.4% of its capacity after 5000 cycles. In $ZnCo_2O_4$/rGO composites, rGO sheets improve electrical conductivity and prevent the agglomeration of oxide particles. When the rGO content is 75%, the composite achieves a specific capacitance of 1957.8 $F \cdot g^{-1}$ at the scan rate of 5 mV/s and 1206 $F \cdot g^{-1}$ at 1 A/g.

DOI: 10.54254/2755-2721/2026.34903

Table 4. Classification of zinc cobaltate composite materials and corresponding performance improvements

Composite System	Key Electrochemical Performance	Causes of Performance Improvement	References
$ZnCo_2O_4$@BC@AC	Specific capacity: 47.2 mAh·g^{-1} at 0.5 A·g^{-1}; Equivalent series resistance: 0.2 Ω; Capacity retention rate: 94.4% after 5000 cycles	Carbon materials build high-conductivity networks and play a mechanical buffering role.	[42]
$ZnCo_2O_4$/rGO	When the rGO content is 75%, the specific capacitance is 1957.8 F·g^{-1} at the scan rate of 5 mV·s^{-1} and 1206 F·g^{-1} at 1 A·g^{-1}.	rGO sheets construct conductive pathways and inhibit the agglomeration of oxide particles.	[43]
$ZnCo_2O_4$@$Ni(OH)_2$ core-shell structure	Specific capacitance reaches 2276 F·g^{-1} (or about 1885 F·g^{-1}) at 1 A·g^{-1}.	The active surface area is enlarged, and the synergistic effect between different components accelerates charge transfer.	[44]
$ZnCo_2O_4$@$Ni(OH)_2$@ PPy sandwich structure	Specific capacitance is increased to 2512 F·g^{-1}.	Multi-component synergistic design further releases the energy storage potential of materials.	[45]
$ZnCo_2O_4$@Ni-Co-S nanosheets	Specific capacity reaches 1396.9 C·g^{-1} (about 3104 F·g^{-1}).	Composite with multi-component sulfides enhances redox activity.	[46]
$ZnCo_2O_4$/MnCoP (flexible wire-shaped device)	Volumetric capacitance: 3.515 F·cm^{-3}; Capacity retention rate: 85.54% after 7500 cycles	The composite structure adapts to flexible deformation and expands application scenarios.	[47]

Apart from carbon-based composites, core-shell heterogeneous structures and multi-component composites also show remarkable effects. Growing $Ni(OH)_2$ on the surface of $ZnCo_2O_4$ nanowires or nanosheets forms $ZnCo_2O_4$@$Ni(OH)_2$ core-shell structures, which expand active area and speed up charge transfer. The material obtains a specific capacitance of 2276 F·g^{-1} (or 848.6 C·g^{-1}, equivalent to about 1885 F·g^{-1}) at 1 A·g^{-1} [40,41]. Further fabrication of $ZnCo_2O_4$@$Ni(OH)_2$@PPy sandwich structures, $ZnCo_2O_4$@Ni-Co-S nanosheets and $ZnCo_2O_4$/MnCoP flexible wire-shaped devices can continuously raise specific capacity, improve cycle retention rate and expand applications in flexible electronic devices.

5. Conclusion

In summary, $ZnCo_2O_4$ has high research value as a supercapacitor electrode material due to its stable spinel structure, zinc-cobalt bimetallic synergistic effect and abundant redox active sites. Morphology regulation can fabricate nanostructures such as nanosheets, nanorods and flower-like microspheres, which enlarge specific surface area, shorten ion diffusion paths and improve the utilization rate of active sites. After being compounded with carbon materials, rGO, $Ni(OH)_2$, Ni-Co-S, PPy, phosphides and other substances, the intrinsic electrical conductivity, interfacial charge transfer capability and structural stability of $ZnCo_2O_4$ are further enhanced. The assembled asymmetric devices also present satisfactory energy density, power density and long-term cycling performance. On the whole, $ZnCo_2O_4$-based materials possess flexible structural designability and great room for performance improvement. However, there are still problems to be solved, including poor intrinsic conductivity, unstable composite interfaces and inconsistent performance in large-scale production. In the future, combining green synthesis technology, defect regulation and device

DOI: 10.54254/2755-2721/2026.34903

structure optimization will promote the practical application of $ZnCo_2O_4$ materials in high-performance, flexible and miniaturized supercapacitors [39-47].

References

[1] Czagany M, Hompoth S, Keshri A K, et al. Supercapacitors: An efficient way for energy storage application [J]. Materials, 2024, 17(3): 702.

[2] Kwarciany R, Fiedur M, Saletnik B. Opportunities and threats for supercapacitor technology based on biochar-a review [J]. Energies, 2024, 17(18): 4617.

[3] Tadesse M G, Ahmmed A S, Luebben J F. Review on conductive polymer composites for supercapacitor applications [J]. Journal of Composites Science, 2024, 8(3): 53.

[4] Oladele I O, Adelani S O, Taiwo A S, et al. Polymer-based nanocomposites for supercapacitor applications: a review on principles, production and products [J]. RSC Advances, 2025, 15(10): 7509-7534.

[5] Zhu H, Deng D, Xu C, et al. Three-dimensional network of graphene for electrochemical capacitors and capacitive deionization [J]. APL Energy, 2024, 2(1): 011502.

[6] Ma H, Ma L, Bi H, et al. The rise of supercapacitor diodes: Current progresses and future challenges [J]. Chinese Physics B, 2024, 33(2): 028201.

[7] Guo Q, Sun C, Li Y, et al. Recent advances of electrode materials applied in an electrochromic supercapacitor device [J]. Molecules, 2025, 30(1): 182.

[8] Ahmad K, Oh T H. Progress in tungsten trioxide-based materials for energy storage and smart window applications [J]. Crystals, 2025, 15(1): 10.

[9] Chitpreecha S, Veerasamy U S, Punyawudho K, et al. Effect of chemical activation agents on properties of durian peel-derived activated carbon for high-energy supercapacitor applications [J]. Biomass & Bioenergy, 2026, 210: 109031.

[10] Rajivgandhi P, Thirumal V, Sekar A, et al. Sustainable sugarcane bagasse-derived activated carbon for high-performance symmetric supercapacitor devices applications [J]. Nanomaterials, 2025, 15(13): 1028.

[11] Prasad K V, Kumar M, Chen C L, et al. A novel carbon microtubes derived from the used surgical face mask for the Ni-F/FMs symmetric supercapacitor device [J]. Journal of Saudi Chemical Society, 2024, 28(3): 101865.

[12] Liu X, Wang R, Wang C, et al. Research and development of double layer P-doped laser induced graphene thin film electrode for flexible micro-supercapacitor applications [J]. International Journal of Electrochemical Science, 2024, 19(8): 100653.

[13] Sain S, Chowdhury S, Maity S, et al. Sputtered thin film deposited laser induced graphene based novel micro-supercapacitor device for energy storage application [J]. Scientific Reports, 2024, 14(1): 16289.

[14] Kumari S, Singh G, Shumaila, et al. Carbon quantum dots in synergistic conjugation with polypyrrole: A sustainable binder-free electrode for ultracapacitor applications [J]. Next Materials, 2025, 9: 101267.

[15] Kumar B A, Ramalingam G, Al Omari S A B, et al. Efficient processed carbon Soot@MoS_2 hybrid Bi-functional electrode for dye-sensitized solar cell and asymmetric supercapacitor devices [J]. Nano Materials Science, 2024, 6(4): 484-494.

[16] Shinde N M, Pumera M. MXene/Bi_2O_3 nanocomposites as supercapacitors for portable electronic devices [J]. Energy & Fuels, 2025, 39(44): 21583-21589.

[17] Das A, Maitra A, Mondal A, et al. Hydrothermal synthesis of Cu_2S/NiS/Ni_3S_4 as high performance supercapacitor application [J]. Journal of Energy Storage, 2024, 92: 112293.

[18] Saju D M, Sapna R, Deka U, et al. MXene material for supercapacitor applications: A comprehensive review on properties, synthesis and machine learning for supercapacitance performance prediction [J]. Journal of Power Sources, 2025, 647: 237302.

[19] Shinde N M, Pumera M. High performance MXene/$MnCo_2O_4$ supercapacitor device for powering small robotics [J]. ACS Applied Electronic Materials, 2024, 6(10): 7339-7345.

[20] Mappoli S, Ghosh K, Pumera M. MXene and polyaniline coated 3D-printed carbon electrode for asymmetric supercapacitor [J]. Virtual and Physical Prototyping, 2024, 19(1): e2361139.

[21] Al-Ghamdi S A, Khasim S, Lokhande P E, et al. Facile microwave synthesis of cerium hydroxide-integrated polyaniline nanocomposites as high-efficiency supercapacitor electrodes [J]. Journal of Alloys and Compounds, 2025, 1037: 182241.

[22] Iqbal M Z, Khizar A, Shaheen M, et al. Pyridine 3, 5-dicarboxylate-based metal-organic frameworks as an active electrode material for battery-supercapacitor hybrid energy storage devices [J]. RSC Advances, 2024, 14(4): 2205-2213.

DOI: 10.54254/2755-2721/2026.34903

[23] Ergun E G C, Onal A M. 3, 4-Ethylenedioxythiophene-quinoxaline based polymer electrode for symmetric supercapacitors on rigid and flexible platforms [J]. Journal of Energy Storage, 2024, 140: 119031.
[24] Gao C, Liu J, Han Y, et al. An energy-adjustable, deformable, and packable wireless charging fiber supercapacitor [J]. Advanced Materials, 2024, 36(49): 2413292.
[25] Hossain M M, Kungsadalpipob P, He N, et al. Multilayer core-shell fiber device for improved strain sensing and supercapacitor applications [J]. Small, 2024, 20(38): 2401031.
[26] Chen Z, Du Z, Li L, et al. High seebeck coefficient thermally chargeable supercapacitor with synergistic effect of multichannel ionogel electrolyte and $Ti_3C_2T_x$ MXene-based composite electrode [J]. Energy & Environmental Materials, 2024, 7(6): e12756.
[27] Rani S, Khandelwal G, Kumar S, et al. Flexible self-powered supercapacitors integrated with triboelectric nanogenerators [J]. Energy Storage Materials, 2025, 74: 103977.
[28] Bhaumik S K, Biswas S, Shauloff N, et al. Photo-rechargeable organic supercapacitor via light-activated electrolytes [J]. Advanced Science, 2025, 12(28): 2500978.
[29] Sriramadasu V K, Jayababu N, Bhattacharyya S. Red carbon dots sensitized Ni-Doped 2D MoS_2 nanosheets as electrode materials for visible-light active photorechargeable supercapacitors [J]. Small Structures, 2025, 6(3): 2400480.
[30] Dai J, Zhu C, Fan Y, et al. Zinc-ion supercapacitor with stress sensing function based on CZIF-67-CNTs cathode [J]. Journal of Energy Storage, 2024, 83: 110670.
[31] Zhou Y, Le K, Gao L, et al. Carbon coated 1 T/2H MoS_2 nanosheets on carbon cloth for high-performance flexible supercapacitor with superior mechanical stability [J]. Journal of Energy Storage, 2025, 119: 116389.
[32] Wang X, Yu M, Hadi M K, et al. An anticoagulant supercapacitor for implantable applications [J]. Nature Communications, 2024, 15(1): 10497.
[33] Meena J, Sivasubramaniam S S, David E, et al. Green supercapacitors: review and perspectives on sustainable template-free synthesis of metal and metal oxide nanoparticles [J]. RSC Sustainability, 2024, 2(5): 1224-1245.
[34] Nagime P V, Shaikh N M, Shaikh S B, et al. Facile synthesis of silver nanoparticles using Calotropis procera leaves: unraveling biological and electrochemical potentials [J]. Discover Nano, 2024, 19(1): 139.
[35] Sharma M, Singh S P, Deb P. Out-of-plane CuSe/WS_2 heterostructure array as a high-performance electrode material in ammonium ion supercapacitor in harsh environment of extreme temperature [J]. Advanced Functional Materials, 2025, 35(33): 2424005.
[36] Mohan V V, Revathy K P, Adithyan C B, et al. Recent developments of tungsten disulfide-based nanomaterials for supercapacitor applications [J]. Journal of Energy Storage, 2025, 88: 111505.
[37] Moraveji S, Fotouhi L, Shahrokhian S, et al. Boosting energy storage performance of ZnCoTe@$NiCoSe_2$ with core-shell structure as an efficient positive electrode for fabrication of high-performance hybrid supercapacitors [J]. Scientific Reports, 2025, 15(1): 25898.
[38] Rahman M M, Alam I, Hossen M R, et al. Facile synthesis of conductive copolymers and its supercapacitor application [J]. Journal of Composites Science, 2025, 9(5): 253.
[39] Dai Meizhen. Hydrothermal synthesis and properties of zinc cobaltate nanocomposite electrode materials [D]. Shenyang University of Technology, 2022. DOI: 10.27322/d.cnki.gsgyu.2022.001309.
[40] Zhang Tengxi. Synthesis and electrochemical properties of zinc cobaltate nanomaterials [D]. Shenyang University of Technology, 2023. DOI: 10.27322/d.cnki.gsgyu.2023.001046.
[41] Li Shaoqi, Chen Tingting. Two morphologies of $ZnCo_2O_4$ electrode materials with high energy storage performance [J]. Journal of Science of Teachers' College and University, 2024, 44(04): 68-72.
[42] Sarr B, Ndiaye N M, Ngom I, et al. Developing nanocomposite materials based on zinc cobaltite and activated carbon derived from rice straw extracts for supercapacitor electrode applications [J]. MRS Advances, 2026, 11: 98-106. DOI: 10.1557/s43580-026-01552-4.
[43] Yadav K K, Abushad M, Ansari M Y, et al. Tailoring rGO content in $ZnCo_2O_4$/rGO nanocomposites with higher electrochemical performance for supercapacitor applications [J]. Diamond and Related Materials, 2026: 113435. DOI: 10.1016/j.diamond.2026.113435.
[44] Zhang T, Sun Y, Wang X, et al. Design and fabrication of cactus-like $ZnCo_2O_4$@$Ni(OH)_2$ core/shell nanosheet arrays electrode for asymmetric supercapacitors [J]. Ionics, 2023, 29(5): 2065-2073. DOI: 10.1007/s11581-023-04935-x.
[45] Li G, Ren H, Geng C, et al. PPy-decorated $ZnCo_2O_4$@$Ni(OH)_2$ electrode materials for flexible supercapacitor [J]. Journal of Solid State Electrochemistry, 2024. DOI: 10.1007/s10008-024-06160-6.
[46] Dai M, Zhao D, Liu H, et al. Nanohybridization of Ni-Co-S nanosheets with $ZnCo_2O_4$ nanowires as supercapacitor electrodes with long cycling stabilities [J]. ACS Applied Energy Materials, 2021, 4(3): 2637-2643. DOI: 10.1021/acsaem.0c03204.

DOI: 10.54254/2755-2721/2026.34903

[47] Shi H, Zhang D, Guo Z, et al. One-dimensional flexible supercapacitors based on $ZnCo_2O_4$/MnCoP composite electrodes with enhanced electrochemical performance [J]. Journal of Power Sources, 2026, 674: 239764. DOI: 10.1016/j.jpowsour.2026.239764.