Proceedings of the 4th International Conference on Functional Materials and Civil Engineering
DOI: 10.54254/2755-2721/2026.34128

Research Progress on the Preparation of Nickel Sulphide Materials and Their Application in Supercapacitors

Zhengyi Chen

Queen Mary University of London Engineering School, Northwestern Polytechnical University, Xi'an, China
czy2023@mail.nwpu.edu.cn

Abstract. Against the backdrop of energy storage technology evolving towards higher power density and longer cycle life, supercapacitors have become a focal point of research due to their rapid charging and discharging capabilities and excellent cycling stability. The electrode materials are key to determining their performance. Nickel sulphide is regarded as a highly promising electrode material for supercapacitors due to its diverse crystal structures, high theoretical specific capacitance and rich redox activity. However, pure nickel sulphide suffers from issues such as limited intrinsic conductivity, significant cyclic volume expansion and a tendency for nanoparticles to agglomerate, which limit its practical application. This paper provides a systematic overview of the basic structure and energy storage mechanisms of supercapacitors, and reviews the main preparation methods for nickel sulphide materials and research into their performance in supercapacitors. By comparing the key performance indicators of typical categories of nickel sulphide materials, this paper highlights their potential and limitations in terms of enhancing specific capacitance, rate capability and cycling stability, thereby providing a theoretical basis and technical insights for the design of nickel sulphide-based supercapacitor electrode materials with high specific energy, long lifespan and high-power density.

Keywords: nickel sulphide, supercapacitor, electrode material, heterostructure

1. Introduction

In the face of the increasing depletion of global fossil fuel reserves and the environmental issues this causes, the development of electrochemical energy storage technologies that combine high energy conversion efficiency with low environmental impact is a key pathway to overcoming the bottlenecks in sustainable energy development. Supercapacitors exhibit enormous application potential in fields such as electric vehicles and portable electronic devices by virtue of their ultra-high-power density, rapid charge-discharge capability and outstanding cycling stability [1, 2].

Electrode materials constitute the core determinant of supercapacitor performance. Among diverse electrode materials, nickel sulphide, as a typical battery-type material, has attracted extensive attention owing to its high theoretical specific capacity and favourable redox activity [3]. Nevertheless, single-component nickel sulphide electrodes still suffer from poor cycling stability,

© 2026 The Authors. This is an open access article distributed under the terms of the Creative Commons Attribution License 4.0 (https://creativecommons.org/licenses/by/4.0/).

DOI: 10.54254/2755-2721/2026.34128

inferior rate capability and volume expansion during charge-discharge processes, which severely restrict their practical applications [4].

To address the above limitations, researchers have developed a variety of modification strategies in recent years. Construction of crystalline/amorphous hetero-interfaces can effectively tailor electronic structures and mitigate volume variation. Meanwhile, regulating micro-morphologies such as three-dimensional porous nanosheet arrays and coral-like architectures increases the specific surface area and shortens ion transport pathways, thereby markedly enhancing cycling stability [5, 6]. Furthermore, the high-entropy strategy offers innovative approaches for electrode material design through the synergistic effects of multi-metallic elements [1]. The combination of nickel sulphide with highly conductive materials, alongside the assembly of asymmetric supercapacitors based on nickel sulphide, can broaden the operating voltage window and facilitate the achievement of high energy density [7, 8]. Whilst considerable progress has been made in the research of nickel sulphide-based materials, it remains challenging to achieve the collaborative optimisation of high specific capacity, superior rate performance and long-term cycle life via facile fabrication processes. This paper systematically reviews the device configuration and energy storage mechanism of supercapacitors, summarises and analyses the crystal structures and synthetic routes of nickel sulphide materials, investigates the effects of diverse modification strategies on electrochemical performances, and prospects the future development trends of such materials.

2. Supercapacitors and their energy storage devices

Supercapacitors are a category of electrochemical energy storage devices featuring high cycling stability, elevated power density and rapid charge–discharge rates. Their energy storage mechanisms mainly rely on the electric double layer formed at the interface between electrodes and electrolytes, or fast reversible Faradaic redox reactions on the surface of electrode materials. Correspondingly, the working principles are primarily divided into electric double-layer capacitance and pseudocapacitance energy storage mechanisms [9].

2.1. Advantages and disadvantages of supercapacitors

Supercapacitors overall demonstrate superior power performance, with a power density exceeding 10 $kW \cdot kg^{-1}$. The charge and discharge processes can be completed within 10 seconds, accompanied by a cycle life of more than 100,000 times. They also possess a broad operating temperature range, high safety and environmental friendliness [9]. However, restricted by energy storage mechanisms and the intrinsic properties of electrode materials, their energy density and voltage window cannot compete with those of lithium-ion batteries. The single-cell operating voltage is relatively low, and the self-discharge rate is higher than that of conventional secondary batteries [10]. In addition, high-performance materials and large-scale fabrication remain hampered by excessive costs, and certain composite electrodes suffer from capacity degradation during long-term cycling [9, 10].

2.2. Application scenarios of supercapacitors

Supercapacitors exhibit irreplaceable application value in a wide range of fields. In the transportation sector, supercapacitors can cooperate with batteries to construct hybrid energy storage systems, which are widely applied in electric vehicles, hybrid vehicles and rail transit for starting acceleration, energy recovery and regenerative braking [9]. In terms of energy storage for power grid units and the grid integration of renewable energy sources, high-power-density supercapacitors

DOI: 10.54254/2755-2721/2026.34128

can rapidly suppress frequency fluctuations, improve regulation accuracy, optimise power quality and reduce the whole-life-cycle cost of power grids [11]. In consumer electronics and industrial equipment, they serve as instantaneous standby power supplies to tackle sudden power outages or deliver rapidly responsive emergency power output. With continuous breakthroughs in material research and structural fabrication technologies, the application scope of supercapacitors is expanding into smart power grids, aerospace, microelectronic energy storage and other emerging fields.

2.3. Structure of supercapacitors

In terms of device composition, supercapacitors consist of four core components: electrodes, electrolyte, separators and current collectors, as illustrated in Figure 1. Among these, electrode materials act as the critical factor determining overall electrochemical performance [9]. In conventional electrode material systems, carbon-based materials serve as the dominant substrate for electrodes due to their large specific surface area and favourable electrical conductivity [12]. Furthermore, the electrode systems of flexible supercapacitors incorporate transition metal oxides with high theoretical capacitance, metal–organic frameworks with large specific surface areas, and highly conductive two-dimensional transition metal carbonitrides (MXene). The balance between flexibility and electrochemical performance is achieved through structural design and composite modification [13]. The adoption of relevant two-dimensional materials enhances specific capacitance, yet their main drawbacks lie in complex synthetic procedures and the utilisation of highly toxic hydrofluoric acid [11].

Within other device components, the separator adopts a porous insulating structure to isolate the positive and negative electrodes while enabling efficient ion transport. Current collectors undertake the collection and conduction of electric current, collectively forming a complete energy storage device [14]. Electrolytes are categorised into four types: aqueous, organic, ionic liquid and solid gel, which provide migratable ions to sustain interfacial energy storage processes [12].

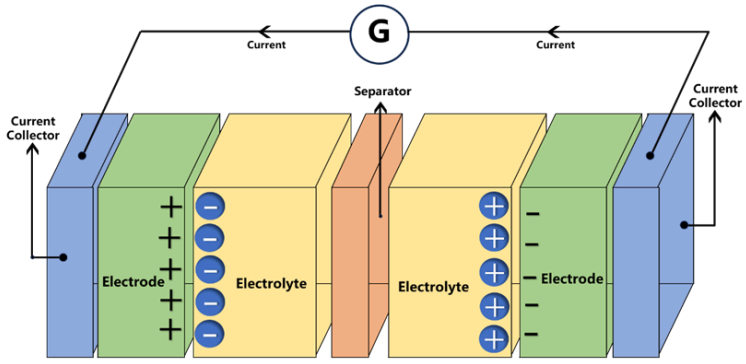

Figure 1. Schematic diagram of the supercapacitor structure

3. Brief introduction to the energy storage mechanisms of supercapacitors

There are two prevalent energy storage mechanisms for supercapacitors: electric double-layer capacitance based on interfacial electrostatic adsorption, and pseudocapacitance derived from rapid reversible Faradaic reactions. Marked differences exist between the two in terms of charge storage sites, kinetic processes and electrochemical characteristics, which together form the fundamental theoretical basis for the energy storage of supercapacitors. The electric double-layer capacitance

DOI: 10.54254/2755-2721/2026.34128

represents the earliest recognised and most widely applied energy storage mechanism, whilst pseudocapacitance offers a critical technical route to break through the bottleneck of energy density. These two mechanisms can function independently or operate synergistically within composite electrode systems.

3.1. Mechanism of electric double-layer energy storage

Electric double-layer capacitance corresponds to a purely physical energy storage process, as shown in Figure 2. It involves no breaking or formation of chemical bonds, and charges are separated and accumulated at the solid-liquid interface between electrodes and electrolytes through electrostatic interaction [14-16]. When an external voltage is applied, anions and cations in the electrolyte migrate directionally under the driving of an electric field and are tightly adsorbed on the electrode surface, forming an electric double-layer structure composed of a Helmholtz compact layer and a diffusion layer, thereby realising energy storage. The capacitance of this mechanism is predominantly determined by the effective specific surface area, pore size distribution and ion compatibility of electrode materials. Sub-nanometre pores can further boost capacitive contribution via the ionic desolvation effect [15]. Benefiting from the reaction-free interfacial process, electric double-layer energy storage delivers ultra-fast charge–discharge rates, excellent rate capability and an ultra-long cycle lifespan, serving as the core origin of the high-power density of supercapacitors. Carbon materials such as porous carbon, graphene and carbon nanotubes act as typical carriers for realising this mechanism [10, 16, 17].

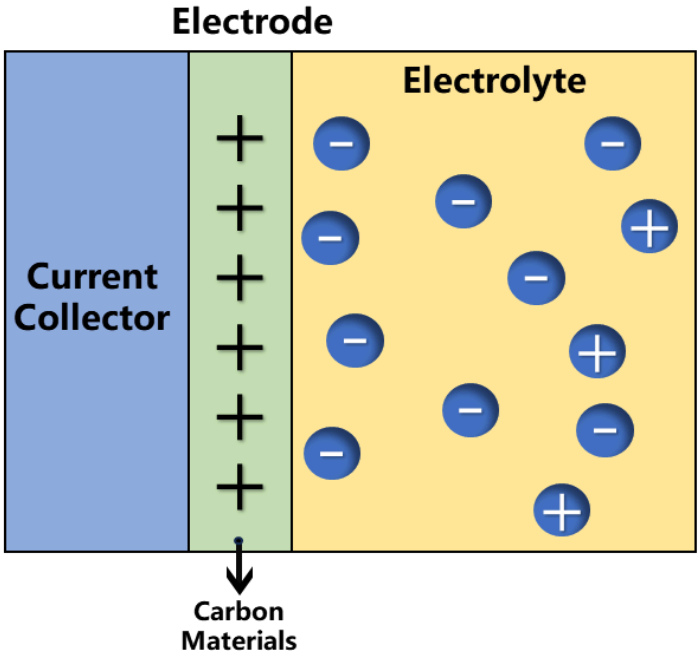

Figure 2. Schematic diagram of the electric double-layer energy storage mechanism

3.2. Mechanism of pseudocapacitive energy storage

Pseudocapacitance achieves charge storage through highly reversible Faradaic redox reactions occurring on or near the surface of electrode materials, and possesses a considerably higher theoretical specific capacity than electric double-layer capacitance [10, 16, 17]. It can be classified

DOI: 10.54254/2755-2721/2026.34128

into three categories by reaction mode: surface redox, intercalation pseudocapacitance and underpotential deposition, as illustrated in Figure 3. Transition metal oxides and hydroxides, conducting polymers and MXene materials are the primary active carriers [15-17]. Unlike the bulk reactions occurring in batteries, pseudocapacitive reactions are confined to the nano-scale surface region of materials. The short ion diffusion pathways and rapid reaction kinetics endow pseudocapacitance with both high capacity and superior rate performance. During charging and discharging, ions trigger rapid valence state variations on the material surface or intercalate into lattice gaps without inducing prominent structural phase transitions, therefore maintaining favourable cyclic stability. Nevertheless, due to the partial irreversibility of Faradaic reactions, its cycle life is generally inferior to that of pure carbon-based electric double-layer electrodes [14-16].

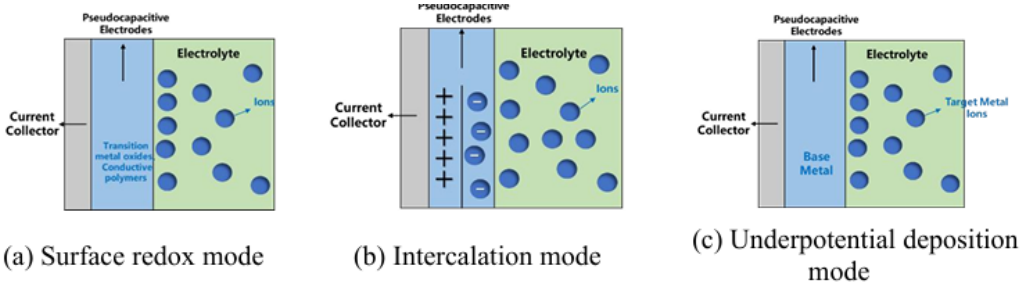

(a) Surface redox mode (b) Intercalation mode (c) Underpotential deposition mode

Figure 3. Schematic diagram of three types of pseudocapacitive energy storage mechanisms

4. Preparation and application of nickel sulphide materials

Nickel sulphide has emerged as a research hotspot for supercapacitor electrode materials on account of its diverse crystal structures, high theoretical specific capacitance and abundant redox activity [18, 19]. Nevertheless, pure nickel sulphide suffers from poor electrical conductivity, severe volume expansion during cycling and serious agglomeration of nanoparticles, which greatly restrict its practical application [20, 21]. To address these drawbacks, researchers have developed a variety of synthesis strategies, including the hydrothermal/solvothermal method, electrodeposition and solid-state synthesis [18, 22, 23].

The hydrothermal or solvothermal method is the most widely adopted synthetic route, as it enables precise regulation of the size and morphology of particles such as nanospheres [24]. The crystalline phase and microscopic morphology of products can be effectively tailored by adjusting the molar ratio of nickel sources to sulphur sources, together with reaction temperature and holding duration [18]. Relevant studies demonstrate that an increased dosage of thiourea facilitates the formation of sulphur-rich phases such as Ni3S4. Although the single β-NiS phase delivers a high initial capacity at low current densities, its capacity retention declines sharply after repeated charge–discharge cycles. This is primarily attributed to structural deterioration induced by severe volume expansion [18].

Electrodeposition allows the direct growth of nickel sulphide on conductive substrates such as nickel foam, eliminating the need for additional binders and conductive additives. This favours the exposure of active sites and facilitates the introduction of structural defects within the material [25]. Amorphous pollen-like phase can be synthesised via one-step electrodeposition with the assistance of thioacetamide. Research indicates that amorphous structures possess abundant dangling bonds and unsaturated coordination sites, offering plentiful electrochemical active centres. Such materials exhibit a distinctly higher specific capacitance than crystalline Ni(OH)2 counterparts, alongside greatly enhanced cycling stability [24].

DOI: 10.54254/2755-2721/2026.34128

Solid-state synthesis features simple operation and environmental friendliness. By fully grinding nickel salts, thiourea and sodium chloride followed by direct heating, ultrathin graphene-like nickel sulphide nanosheets can be fabricated with sodium chloride acting as a growth regulator [26]. Furthermore, microwave-assisted synthesis completes the sulphidation reaction within a short period, markedly shortening the synthesis cycle and reducing energy consumption, which makes it suitable for rapid material preparation [27]. For composite electrode materials, a stepwise fabrication strategy is generally adopted. A carbon skeleton (such as reduced graphene oxide, activated carbon and MOF-derived carbon) is firstly constructed through pyrolysis or hydrothermal treatment. Nickel sulphide nanoparticles are then anchored onto the carbon matrix via hydrothermal reaction or in-situ sulphidation [22, 23, 27, 28].

Table 1 summarises the preparation routes and raw materials of several typical nickel sulphide materials.

Table 1. Preparation methods and raw materials of different types of nickel sulphide materials

No.	Material category	Raw materials (nickel source | sulphur source | substrate)	Typical preparation method	References
1	Pure-phase nickel sulphide	$Ni(NO_3)_2·6H_2O$ | thiourea	Hydrothermal/solvothermal method	[18, 24]
2	Amorphous nickel sulphide	$Ni(NO_3)_2·6H_2O$ | thioacetamide| nickel foam	One-step electrodeposition	[25]
3	Carbon composite nickel sulphide	Nickel salt | sulphur source | GO, activated carbon or MOF	Hydrothermal compounding or microwave synthesis	[22,23,27,28]
4	Polymetallic sulphides	Ni/Co/V/Mo salt | thiourea	Hydrothermal/solvothermal method	[19, 29]
5	MOF-derived nickel sulphide	Ni/Cu salt | 2-methylimidazole, BDC | thiourea	Template method combined with sulphidation	[22, 30]

5. Performance study of nickel sulphide materials for supercapacitors

The electrochemical performance of nickel sulphide-based electrode materials is closely associated with their chemical composition, crystal structure, microscopic morphology and composite mode [19, 20, 22]. Although pure-phase nickel sulphide features simple synthesis, it usually exhibits poor cyclic stability due to severe volume expansion and insufficient intrinsic electrical conductivity [18]. In contrast, the long-range disordered structure of amorphous nickel sulphide provides abundant dangling bonds and unsaturated coordination sites. Meanwhile, its isotropic structural characteristics help buffer volume strain during charge-discharge cycles, thereby significantly extending the cycle life [25].

Compositing nickel sulphide with highly conductive carbon materials is an effective approach to enhance comprehensive performance. Activated carbon possesses a hierarchical structure with micropores and mesopores, which not only provides a large ion-accessible surface area but also ensures fast ion transport channels. When combined with activated carbon, the electric double-layer capacitance and pseudocapacitance work synergistically, achieving a specific capacitance of up to 785 F/g and a power density as high as 10856 W/kg [27]. Another study shows that after wrapping Ni3S2 nanocrystals with nitrogen-doped reduced graphene oxide, an efficient conductive network

DOI: 10.54254/2755-2721/2026.34128

and strong coupling interface are formed, enabling the material to maintain high capacity even at high current densities with significantly improved rate performance [28].

The introduction of a second metal element, such as cobalt or vanadium, into nickel sulphide to form a bimetallic sulphide can further enhance the material's electrochemical performance. Multi-electron redox reactions can occur between the bimetallic ions (such as Ni^{2+}/Ni^{3+} and $Co^{2+}/Co^{3+}/Co^{4+}$ or Ni^{2+}/Ni^{3+} and V^{4+}/V^{5+}) and the charge transfer between different metal ions can reduce the charge transfer resistance of the electrode. Research has shown that by employing rational crystal structure design to form epitaxial heterojunctions between the two sulphide phases along specific crystal orientations, the lattice mismatch between the two phases can be controlled at a low level, resulting in a negative interfacial energy and thus a thermodynamically stable heterostructure [19]. For example, studies have shown that when the current density of NiCo2S4 nanotubes is 1 mA/cm², the specific capacitance can reach as high as 1948 F/cm², and the capacity can still be maintained at around 70% even at high current densities [31]. When assembled into an asymmetric supercapacitor, the energy density can reach over 60 Wh/kg, with excellent cycling stability [19]. When vanadium is introduced into nickel sulphide to form nickel-vanadium sulphide, which is then composited with graphene, the multivalent nature of vanadium synergises with the redox pairs of nickel to provide abundant charge storage pathways; even after tens of thousands of cycles, the capacitance retention rate remains above 90% [29]. Furthermore, combining an ordered carbon network derived from metal-organic frameworks with nickel-copper bimetallic sulphides allows for the full utilisation of the high specific surface area of the carbon material and the synergistic effects of the bimetallic system, thereby achieving good cycling stability in symmetric supercapacitors [30].

Table 2 shows that the performance of supercapacitors varies significantly depending on the type of nickel sulphide-based electrode material used.

Table 2. Comparison of supercapacitor performance for different types of nickel sulphide-based electrode materials

No.	Material Category	Typical Specific Capacitance (F/g)	Cycling Stability (%)	Energy Density (Wh/kg)	Main Advantages	References
1	Purephase nickel sulphide (flowerlike βNiS)	996	ca. 30	—	Simple synthesis	[18]
2	Amorphous nickel sulphide	350	78.7	245	Abundant active sites, favourable structural flexibility	[25]
3	Carbon composite nickel sulphide	785	86.5	35	Synergistic effect of electric doublelayer capacitance and pseudocapacitance	[27, 28]
4	Polymetallic sulphides	1437-1780	91-95	62.8-74.7	Multi-electron reactions, high interfacial stability	[19, 27, 31]
5	MOF-derived composite materials	535	86.5	15.8	Ordered pore structure, bimetallic synergistic effect	[22, 30]

DOI: 10.54254/2755-2721/2026.34128

6. Conclusion

Nickel sulphide has become one of the important candidates for supercapacitor electrode materials due to its diverse crystal structures, high theoretical specific capacitance, and excellent redox activity. However, pure nickel sulphide has inherent drawbacks such as insufficient electrical conductivity, significant volume expansion during charge-discharge processes, and easy agglomeration of nanoparticles, which severely restrict its rate performance and cycle life.

In response to the aforementioned problems, this paper systematically sorts out the main preparation strategies such as hydrothermal/solvothermal method, electrodeposition method and solid-state synthesis method, and focuses on analyzing the influence mechanism of various modification methods on the electrochemical performance of materials. The experimental results show that amorphous nickel sulphide achieves the unification of high activity and long cycle life by virtue of a large number of active sites provided by its disordered structure and isotropic volume buffering capacity; carbon-composite nickel sulphide balances high specific capacitance and excellent power characteristics through the synergistic effect of electric double-layer capacitance and pseudocapacitance as well as a three-dimensional conductive network; polymetallic sulphides further improve the specific capacitance and rate performance by virtue of the multi-electron reaction of bimetallic ions and low charge transfer resistance.

Although the current nickel sulfide-based electrode materials still face challenges such as complex synthesis processes, insufficient batch stability, and sulfur element loss during long-term cycling, their characteristics of abundant resources, environmental friendliness, and strong performance adjustability provide broad space for subsequent research. In summary, nickel sulfide materials show good research and application prospects in the construction of supercapacitor electrodes. By summarizing and comparing the performances of typical categories such as pure-phase, amorphous, carbon-composite, multi-metallic sulfides and MOF-derived composite materials, this paper clarifies the correlation law between material structure and electrochemical performance, and provides a theoretical basis and technical ideas for designing nickel sulfide-based energy storage materials with high specific energy, long service life and high-power density.

References

[1] Ren, P., Yang, G., Jin, Y., Peng, C., Lei, X., Yin, F., Zhao, Z., Wang, Y., Guo, Z., Chen, Z., & Ren, F. (2025). High entropy materials as electrode materials for supercapacitors: A review. Journal of Alloys and Compounds, 1024, 180153. https: //doi.org/10.1016/j.jallcom.2025.180153

[2] Seenivasan, S., Adhikari, S., Sivagurunathan, A. T., & Kim, D.-H. (2025). Supercapatteries: Unlocking the potential of battery-supercapacitor fusion. Energy & Environmental Science, 18, 1054–1095. https: //doi.org/10.1039/D4EE04348K

[3] Reenu, Sonia, Phor, L., Kumar, A., & Chahal, S. (2024). Electrode materials for supercapacitors: A comprehensive review of advancements and performance. Journal of Energy Storage, 84, 110698. https: //doi.org/10.1016/j.est.2024.110698

[4] Xia, Q., Si, L., Liu, K., Zhou, A., Su, C., Shinde, N. M., Fan, G., & Dou, J. (2023). In situ preparation of three-dimensional porous nickel sulfide as a battery-type supercapacitor. Molecules, 28(11), 4307. https: //doi.org/10.3390/molecules28114307

[5] Wan, L., Wang, Y., Jiang, D., Zhang, Y., Xie, M., Chen, J., & Du, C. (2023). Constructing nickel sulfide @ nickel boride hybrid nanosheet arrays with crystalline/amorphous interfaces for supercapacitors. Journal of Colloid and Interface Science, 649, 815-825. https: //doi.org/10.1016/j.jcis.2023.06.175

[6] Phonsuksawang, P., Wongprasod, S., Tanapongpiset, N., Jiamprasertboon, A., Ngamchuea, K., Saenrang, W., & Siritanon, T. (2023). Hierarchical coral-like nickel cobalt sulfides electrodes for supercapacitors. Materials Chemistry and Physics, 305, 128528. https: //doi.org/10.1016/j.matchemphys.2023.128528

DOI: 10.54254/2755-2721/2026.34128

[7] Zhong, N., Kang, Q., Li, Z., Wang, S., Tian, X., Xu, R., & Yang, L. (2024). Electrode materials with high performance of nickel sulfide or titanium nitride@Co-based metal–organic frameworks or nickel foam for supercapacitors. Energies, 17(11), 2788. https: //doi.org/10.3390/en17112788
[8] Anjana, P. M., & Aminabhavi, T. M. (2025). Supercapattery: Energy storage devices combining functionalities of battery electrodes and supercapacitor electrodes. Journal of Energy Storage, 134, 118265. https: //doi.org/10.1016/j.est.2025.118265
[9] Manfo TA, Laaksonen H. A review of carbon-based hybrid materials for supercapacitors. New Carbon Materials. 2025; 40(1): 81-110.
[10] Amiri A, Bruno A, Polycarpou AA. Configuration-dependent stretchable all-solid-state supercapacitors and hybrid supercapacitors. Carbon Energy. 2023; 5: e320.
[11] Dang, G. J., Xu, W. H., Wu, P. Y., et al. (2025). Design and preparation of high-energy-density supercapacitor single cells and their application in thermal power frequency modulation. Electrical Technology, 26(9), 21-28.
[12] Banerjee, S., Mordina, B., Sinha, P., & Kar, K. K. (2025). Recent advancement of supercapacitors: A current era of supercapacitor devices through the development of electrical double layer, pseudo and their hybrid supercapacitor electrodes. Journal of Energy Storage, 108, 115075.
[13] Xing, X. X., Liu, J. S., Zhu, Y., et al. (2025). Progress of electrode materials in flexible supercapacitors. Fine Chemicals, 42(6), 1221-1230.
[14] Shuja A, Khan HR, Murtaza I, Ashraf S, Abid Y, Farid F, et al. Supercapacitors for energy storage applications: Materials, devices and future directions: A comprehensive review. Journal of Alloys and Compounds. 2024 Oct 1; 176924-4.
[15] Wu QH, He TQ, Zhao L, Wu YZ, Ran F. Cyclic stability of supercapacitors: materials, energy storage mechanism, test methods, and device. Journal of Materials Chemistry A. 2021; 9(43): 24094-24147.
[16] Olabi AG, Abbas Q, Al Makky A, Abdelkareem MA. Supercapacitors as next generation energy storage devices: Properties and applications. Energy. 2022; 248: 123617.
[17] Zhang T, Li C, Fu L, et al. Exploring MXene materials in energy storage devices: a review of supercapacitor applications. Journal of Energy Chemistry. 2022; 70: 326-352.
[18] Gou, J., Xie, S., Li, Y., Kong, X., & Li, C. (2019). Studies on preparation and performance of nickel sulfides for the application in supercapacitors. Journal of Materials Science: Materials in Electronics, 30, 15429-15436. https: //doi.org/10.1007/s10854-019-01918-5
[19] Liu, S., Wu, J., Wang, X., He, S., & Yang, J. (2024). Fabrication of nickel-cobalt sulfide heterostructures with stable thermodynamic interfaces and enhanced electrochemical performance. Chemical Engineering Science, 293, 120065.
[20] Sheikh, F., Arshad, A., Marriam, F., Ahmad, Z., Haider, A., Iqbal, M., & Mansoor, M. A. (2023). Fabrication of a nickel sulfide/nickel oxide heterostructure for efficient electrochemical oxidation of methanol. New Journal of Chemistry, 47, 17970–17983.
[21] Muhammad, M. A., Liu, Y., Sheng, L., Haruna, B., Hu, X., & Wen, Z. (2023). Phase engineering of nickel-based sulfides toward robust sodium-ion batteries. Journal of Colloid and Interface Science, 646, 245–253.
[22] Ramesh, S., Rabani, I., Sivasamy, A., Kakani, V., Haldorai, Y., Seo, Y.-S., Kim, J.-H., & Kim, H. S. (2024). Fabrication of nickel-copper sulfide nanoparticles decorated on metal-organic framework composite for supercapacitor application by hydrothermal process. Journal of Alloys and Compounds, 977, 173375.
[23] Zhao, Q., Zhao, T., Han, Y., Jiang, T., Zhang, J., Feng, R., & Li, X. (2025). Hydrothermal fabrication and electrochemical property of a 0D/2D hybrid nanostructure with graphitic carbon nitride-incorporated nickel molybdenum sulfide. Langmuir, 41, 4702–4713. https: //doi.org/10.1021/acs.langmuir.4c04583
[24] Sindhu, S., Kumar, V., Bulla, M., Sheokand, A., Dahiya, R., Sisodia, A. K., & Mishra, A. K. (2025). Development of an efficient supercapacitor using hydrothermally synthesized nickel sulfide. Journal of Materials Science: Materials in Electronics, 36, 1151. https: //doi.org/10.1007/s10854-025-15248-2
[25] Li, N., Zhang, X., Li, C., Li, X., Wang, T., Qu, G., Wang, C., & Xu, X. (2024). High-performance aqueous zinc batteries enabled by amorphous nickel sulfide materials. Materials Letters, 361, 136147.
[26] Dhakal, G., Sahoo, S., Sharma, K. P., & Zhao, G.-L. (2025). A review on the recent advancements of Ni-based sulfides and mixed sulfides for supercapacitors and electrocatalysis (oxygen evolution reaction). Molecules, 30, 2877. https: //doi.org/10.3390/molecules30132877
[27] Moagi VM, Maphoru MV, Mabena LF. Preparation, characterisation, and electrochemical evaluation of nickel sulphide on lignin-derived carbon material for supercapacitors. [Manuscript under review]. 2025.
[28] Pour, G. B., Fard, H. N., Aval, L. F., & Dubal, D. (2023). Recent advances in Ni-materials or carbon nanocomposites for supercapacitor electrodes. Materials Advances, 4, 6152-6174. https: //doi.org/10.1039/d3ma00609c

DOI: 10.54254/2755-2721/2026.34128

[29] Guo, M., Du, J., Liu, X., Liu, W., Zhao, M., Wang, J., & Li, X. (2024). Rational fabrication of nickel vanadium sulfide encapsulated on graphene as an advanced electrode for high-performance supercapacitors. Molecules, 29, 3642. https: //doi.org/10.3390/molecules29153642
[30] Li, S.-S., Yu, Q.-H., Mi, J., Hao, L., Jiang, L.-J., & Zhuang, S.-X. (2024). Preparation and electrocatalytic performance of novel-integrated Ni-Mo sulfide electrode materials for water splitting. Rare Metals, 43, 6384-6393. https: //doi.org/10.1007/s12598-024-03031-x
[31] Yu, H., Shen, D., Zhang, R., & Zhao, S. (2024). Synthesis of flower-like crystal nickel-cobalt sulfide and its supercapacitor performance. Coatings, 14, 564. https: //doi.org/10.3390/coatings14050564