Proceedings of the 4th International Conference on Mechatronics and Smart Systems
DOI: 10.54254/2755-2721/2026.33870

Research on Hardware Design of In-wheel Motor Drive Controller for New Energy Vehicles Based on STM32

Congyuan Tan

Department of Engineering, King's College London, London, UK
congyuan.tan@kcl.ac.uk

Abstract. The final control architecture of future new energy vehicles is distributed drive and in-wheel motor technology, one type of distributed drive, is leaving the concept phase and entering the practical application phase. In this paper, the Protean PD18 dual rear-wheel in-wheel permanent magnet synchronous motor (PMSM) is selected as the control object and a hardware system on the in-wheel motor drive controller is designed using the STM32F103 microcontroller. In order to overcome the severe operating environment of in-wheel motors, such as vibration, heat and strong electromagnetic interference the system employs a layered modular architecture and realizes the design of important circuits such as power conversion, power drive, optocoupler isolation, Hall signal filtering, temperature and humidity detector, current/voltage sampling and protection, and CAN bus communication. The drive stage uses the IRFP4568PBF power MOSFET with the IR2110 gate driver IC, which is used to provide reliable high-side driving with bootstrap voltage boosting. The 6N137 high-speed optocoupler and 74HC14 Schmitt trigger are used in the isolation stage to guarantee the integrity and safety of the high-frequency transmission of the PWM signals. The communication phase develops a CAN bus interface that is in compliance with ISO 11898 using TJA1050 transceiver so that the vehicle network can communicate with the interface and exchange data reliably. The design offers a stable hardware reference platform of distributed in-wheel motor drive control of new energy vehicles.

Keywords: New energy vehicle, In-wheel motor, Hardware circuit design, Distributed drive

1. Introduction

With non-renewable energy sources depleting and global climate change accelerating, automotive industry electrification has become an irreversible trend in history. Even though the traditional centralized-drive electric cars reduce the carbon emissions to a certain degree, they still have complicated mechanical transmission systems, including gearboxes, drive shafts and differentials, which inherently have disadvantages such as low transmission efficiency, high vehicle weight and excessive space usage. Conversely, the distributed drive technology, especially in-wheel motor drive technology, integrates the powertrain, transmission, and braking devices into the wheel to the point that the traditional mechanical drivetrain is totally removed. This zero-transmission design does not just greatly enhance the efficiency of energy usage, it also provides the vehicle with the capability to directly and accurately manage the amount of torque and rotational speed of each wheel; however,

© 2026 The Authors. This is an open access article distributed under the terms of the Creative Commons Attribution License 4.0 (https://creativecommons.org/licenses/by/4.0/).

DOI: 10.54254/2755-2721/2026.33870

what is more important is that it provides the vehicle with the capability to manage it independently. The handling stability, terrain coverage and active safety of the vehicle can be enhanced significantly through the use of advanced algorithms including torque vectoring and direct yaw moment control [1, 2].

But there are challenges that are accompanied by opportunities. The in-wheel motor is unsprung mass and direct subject to harsh road impacts and vibrations. Meanwhile, the motor and controller are normally placed inside the limited space of the rim of the wheel, with heat dissipation conditions being unfavorable and high levels of electromagnetic interference exist. Current industrial grade inverters cannot be used to satisfy the high standards of vehicle conditions in the areas of size, weight, reliability and environmental flexibility. Thus, the creation of a dedicated, very reliable, low-cost, and easily controllable in-wheel motor drive controller has great theoretical and engineering importance to the further industrialization of the distributed drive technology. The paper outlines the hardware circuit design of a in-wheel motor drive controller based on STM32, including the main modules, such as power conversion, power drive, signal isolation, Hall signal processing, temperature and humidity detect and current/voltage sampling and protection, and CAN bus connection, which can serve as a technical reference to distributed drive control [3, 4].

2. Hardware circuit design of in-wheel motor controller

2.1. In-wheel motor control block diagram design

The architecture of the system includes a power management module, signal acquisition and protection module, power drive module, main controller module, and communication and detection module. The STM32 is the main controller of the system and connects to two independent CAN buses through two separate TJA1050 CAN transceivers to connect to one independent motor controller of each CAN bus. This creates a double-redundant or grouped control communication architecture, allowing for independent driving and fine control of the two in-wheel motors.

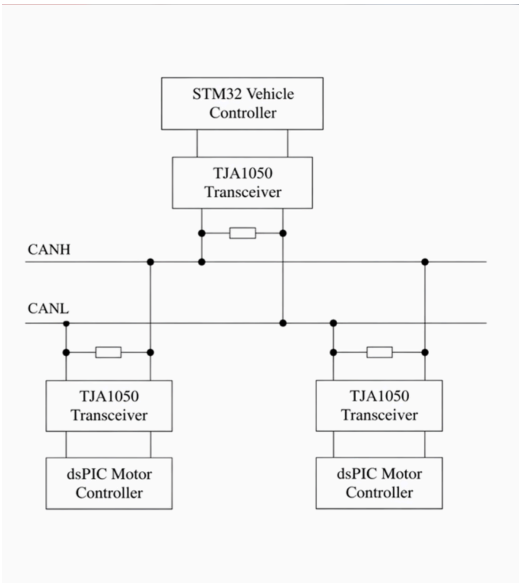

Figure 1. In-wheel motor control principle block diagram

DOI: 10.54254/2755-2721/2026.33870

2.2. Main controller selection

For the control system of in-wheel motor for new energy vehicle, the main control unit needs to compute on motor control algorithm, acquire and process signals, conduct communication control and manage system state. All of this asks a lot of the processing ability, real-time regulation capability and also peripheral resources available from the processor itself. We choose STM32 series MCU as the core controller for implementing in-wheel motor drive control and vehicle communication functions. STM32 series MCUs, developed by STMicroelectronics, are high-performance low-power microcontrollers based on the ARM Cortex-M core architecture which are widely used in applications of new energy vehicle motor control and industrial control etc. These chips are able to provide high-speed computation and high-precision control required for motor control systems.

When it comes to select main control chip, STM32F103 series is selected because ARM Cortex-M core provides great performance for real-time computation of complex algorithms (including but not limited to "Field-Oriented Control(FOC)"), and so many peripherals including advanced timers with high-resolution and high-speed ADCs are integrated on-chip that make developers efficiently implement time-critical motor control tasks. The range of communication interfaces facilitates system integration, the mature software ecosystem removes development barriers, and strong performance track record in industrial and automotive applications guarantees extremely high reliability. Thus, it is very suited for the vehicle-mounted motor control systems that has high performance and high integration (as shown in the minimum schematic diagram at Fig. 2 [5]).

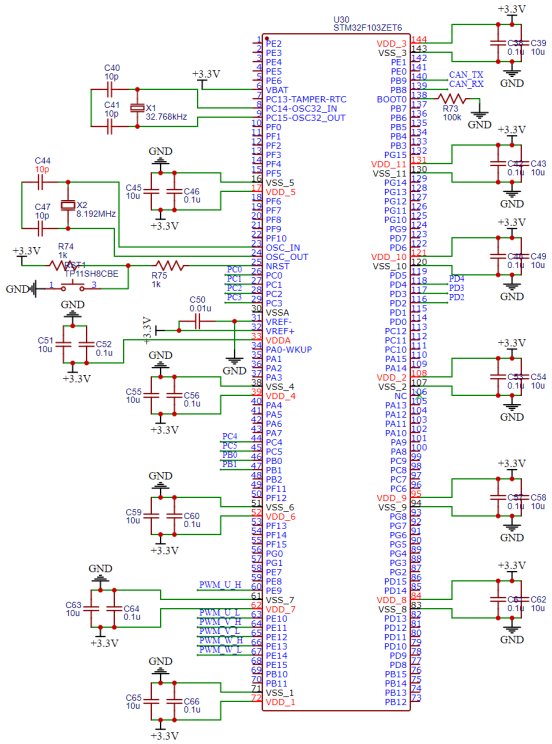

Figure 2. STM32F103ZET6 minimum schematic diagram

DOI: 10.54254/2755-2721/2026.33870

2.3. Power conversion circuit

The system is designed based on a multi-stage power architecture of high-voltage DC-DC buck conversion + LM1117 linear regulation to convert the high-voltage output from traction battery into three voltage levels: 12 V, 5 V and 3.3 V which are used as constant power source for drive module, sensor interfaces and main control chip, respectively. It can be used for higher-power conversion thanks to its high efficiency and low heat dissipation; therefore, the typical DC-DC conversion stage is a great fit. The LM1117 linear regulation stage uses a simple peripheral circuit to provide low output ripple and deliver a low-noise power source for the main controller and digital logic circuits. EMI filter capacitors and decoupling capacitors are set at the input and output of each stage to attenuate EMI noise via well design topology with sufficient capacitance, thereby stabilizing power supply for reliable operation.

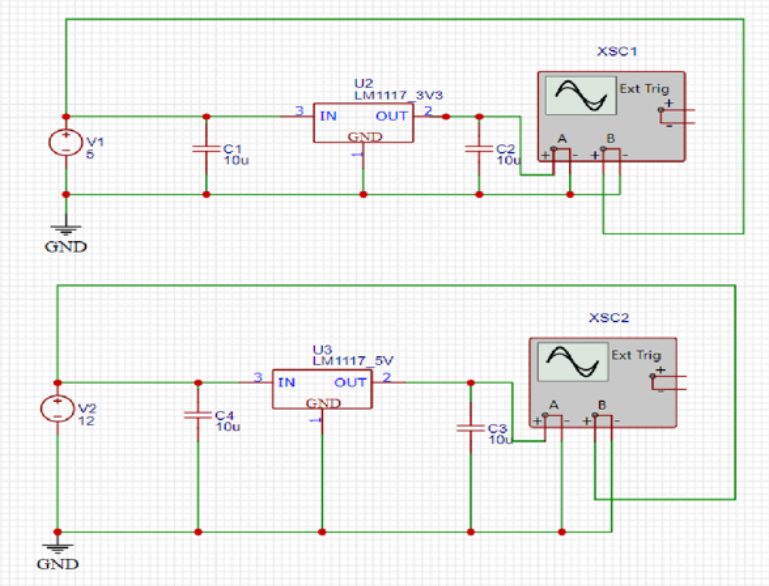

Figure 3. Power conversion circuit

2.4. Drive circuit design

The power drive module utilizes a topology including a three-phase inverter and six IRFP4568PBF power MOSFETs where each phase has one high-side and one low-side switch[3]. Gate drives are constructed using IR2110 high-low-side integrated gate driver ICs. The high-side driver produces a floating drive voltage using a bootstrap circuit, and the low-side driver is connected directly. The overall structure is compact and efficient. Space Vector Pulse Width Modulation (SVPWM) is implemented by the primary controller, the STM32, to have a more efficient DC bus voltage and less harmonic current to achieve more accurate control of the motor torque and speed [2]. In the gate drive loop, fast-recovery diodes are connected with current-limiting resistors in series to avoid damage to the devices from voltage spikes. To enhance the stability of the system and to avoid switching ripple, the DC bus is employed with large filter capacitors.

DOI: 10.54254/2755-2721/2026.33870

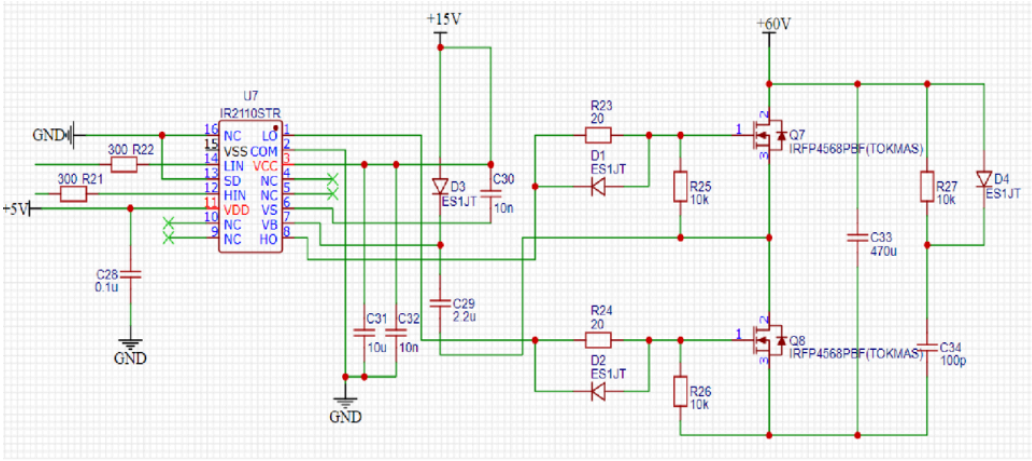

Figure 4. Drive circuit

2.5. Optocoupler isolation circuit design

A high-speed 6N137 optocoupler isolates the high-voltage side from the control side to prevent high-voltage noise from getting to the controller between the main control unit and the power drive module [4]. The 6N137 propagates delay and switching speed, making it ideal for high-frequency PWM signal, real-time signal transmission. To limit the current through the built-in LED, a current-limiting resistor is placed in series on the input side. A pull-up resistor is placed, on the output side to define the state. The power supply side of the controller has a smoothing capacitor that is used for noise suppression. A protection diode for reverse voltage is used, making the line from the control side to the power side, electrically safe. This increases the protection of the Main controller greatly.

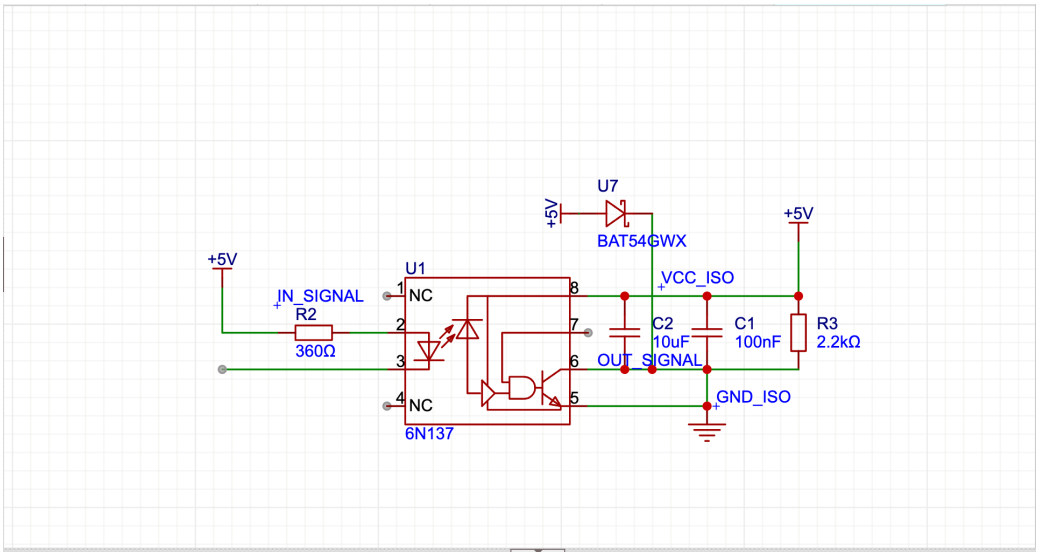

Figure 5. Optocoupler isolation circuit

2.6. Hall signal filtering circuit

The Hall signal conditioning circuit is a two-stage cascaded signal conditioning circuit using RC low-pass filtering and Schmitt trigger reshaping to condition the Hall sensor input signals into high quality signals. The front-end RC network (R12–R14, R15–R20, C22–C27) is successful in high-

DOI: 10.54254/2755-2721/2026.33870

frequency spike noise due to the inverter switching and the interface robustness due to current-limiting resistors. The back-end 74HC14 Schmitt trigger recreates the filtered signal with its hysteresis properties, to remove edge jitter and slow-edge interference, producing a square wave with sharp edges and constant amplitude. The balance of the overall structure as a whole between "interference suppression and preservation of edge accuracy, is good in supplying the MCU with accurate position feedback information and greatly improves the operational stability and commutation accuracy of the motor control system in highly electromagnetic interference environments [2].

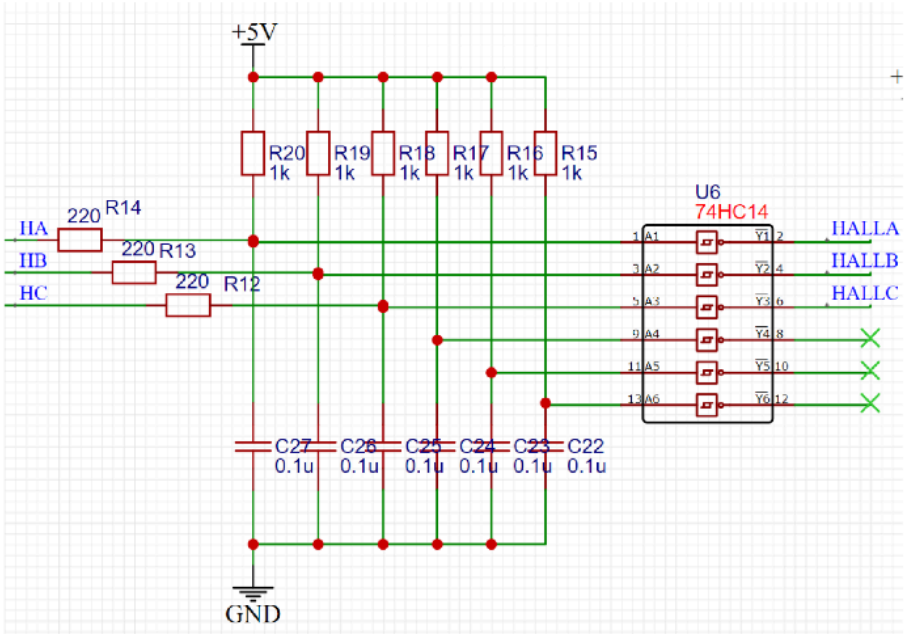

Figure 6. Hall signal filtering circuit

2.7. Temperature and humidity detection circuit

The temperature sensor part of this circuit involves the DS18B20 digital temperature sensor, which is linked to the STM32 central controller through a single-wire (1-Wire) bus to provide periodic temperature sensor reading and over temperature control. The DS18B20 can also produce digital temperature values directly, unlike analog temperature sensors (like thermistors with ADC) which require the use of an A/D converter followed by a digital-to-analog converter. It has strengths like high noise immunity, excellent calibration consistency, and easy software processing and is especially useful in temperature measurement applications in highly electromagnetically interfered settings like motor controllers.

The humidity sensor part involves the DHT11 digital temperature and humidity sensor that contains an in-built humidity-sensitive component, temperature measuring unit and a digital signal processing circuit that allows a direct output of calibrated digital information. A 10 k oh pull-up resistor (R1) is set on the DATA line to keep the idle state of the communication bus high, and this meets the timing constraints of the single-wire protocol of the DHT11. At the power supply terminal, a decoupling capacitor (C1) of 10 uF is also placed in parallel to reduce supply ripple and transient interference to significantly reduce the chances of humidity reading jumps and communication packets loss.

DOI: 10.54254/2755-2721/2026.33870

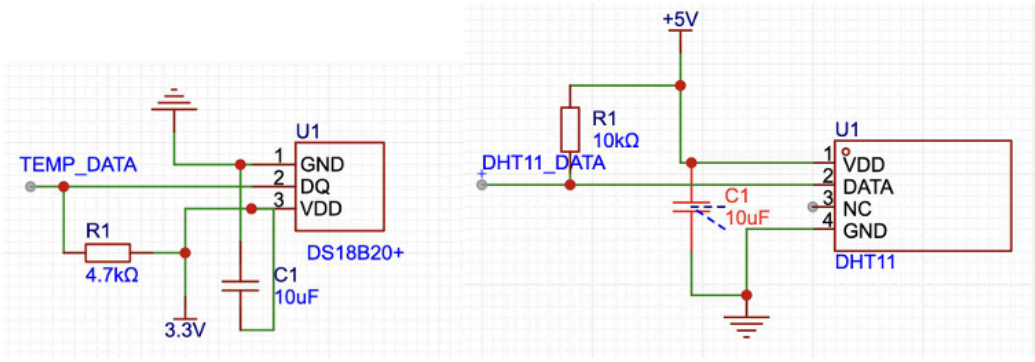

(a) Temperature detection **(b) Humidity detection**

Figure 7. Temperature and humidity detection circuit

2.8. Current/voltage sampling and fault indication circuit

The circuit comprises an all-encompassed and dependable motor current detection and protection system using a three-phase architecture of shunt resistor sampling, operational amplifier signal conditioning as well as hardware comparator protection. Low-resistance, high-precision shunt resistors convert the three-phase currents to millivolt-level differential signals, before amplification by high-speed operational amplifiers with RC low-pass filtering and midpoint biasing, accurately mapping them to the ADC sampling range, and eliminating PWM switching noise and providing the dynamic response of the current loop. The voltage on the bus is subjected to voltage division and buffering to bring the system stable voltage sampling. Besides, hardware comparators are used to conduct real time threshold comparison of the sampled signals. When an overcurrent or overvoltage fault occurs, a FAULT signal may be sent out within microseconds to provide direct control of LED alarm signaling and PWM output, providing hardware-level rapid protection, independent of the MCU. The sampling accuracy, noise immunity and response speed of the protection is balanced in the overall design, and offers the motor control system with a very dependable current detection and fault protection system [2].

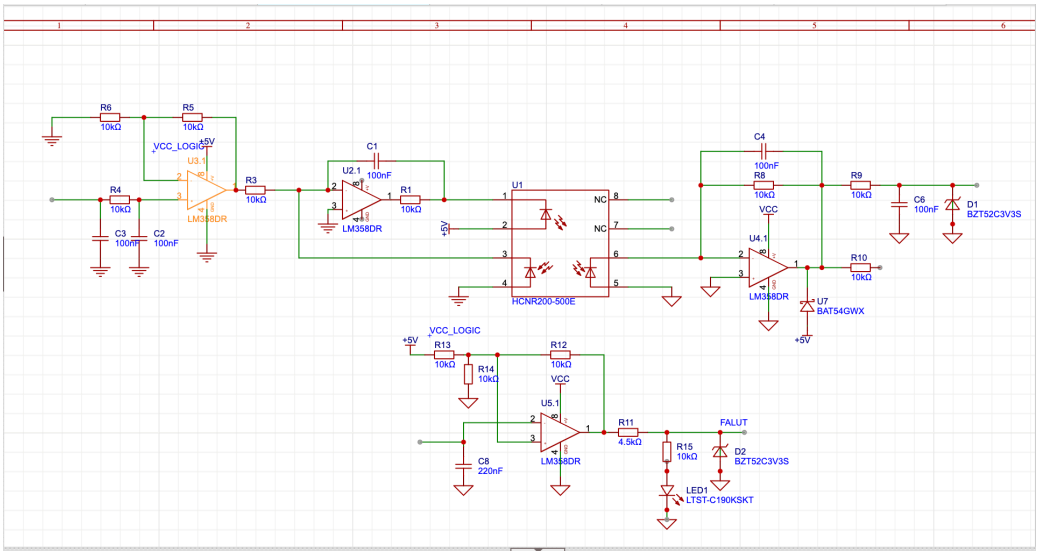

Figure 8. Current/voltage sampling and fault indication circuit

DOI: 10.54254/2755-2721/2026.33870

2.9. CAN bus communication circuit

The core of the CAN communication circuit consists of the built-in bxCAN controller of the STM32 and the TJA1050 high-speed transceiver, which creates a solid bus interface, which is in compliance with ISO 11898. The CAN_TX/CAN_RX pins of the STM32 are simply hard-wired to the TJA1050, with the protocol layer integrating smoothly with the physical layer. At the bus end, a 120 Ω matching resistor is implemented to essentially reduce signal reflections and guarantee signal integrity at high communication rates. To counter the high level of electromagnetic interference of vehicle applications, the circuit uses common-mode choke on the CANH/CANL lines to prevent common-mode noise, uses TVS diodes to provide ESD and surge protection, and uses decoupling capacitors near the transceiver power supply to reduce the power supply ripple interference. The system specifies three types of messages on the communication protocol level, such as status reporting, command reception, and fault alarm, using CAN 2.0B extended frames, and hardware filters and priority management mechanism to guarantee real-time transmission and reliability of critical data. The general design ensures noise immunity, communication stability and functional safety, which has a strong channel of data exchange between the motor controller and the vehicle system [6-8].

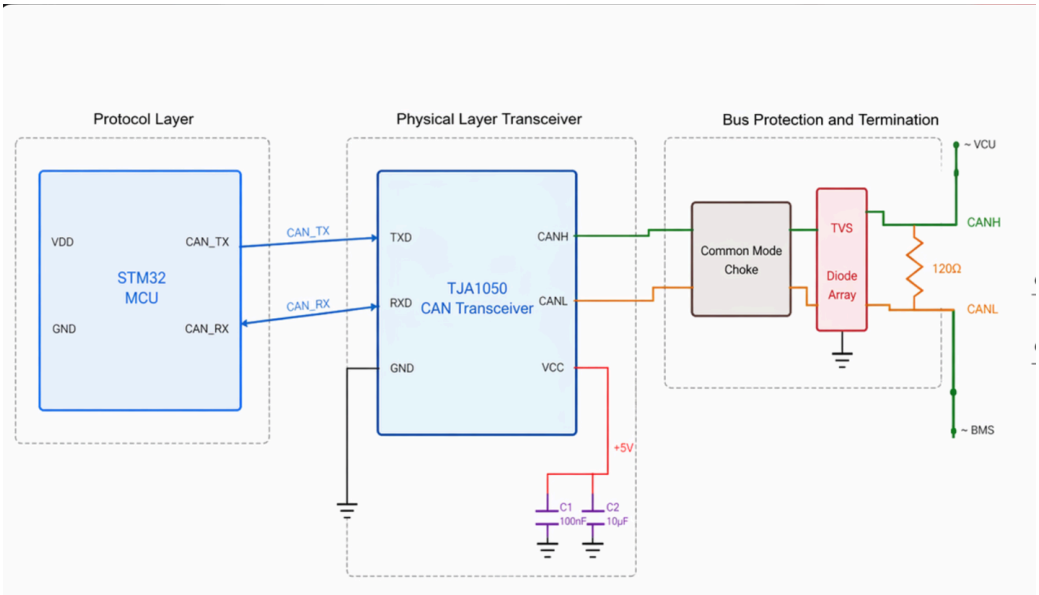

Figure 9. CAN bus communication circuit

3. Conclusion

The target for this study was Protean's PD18 dual rear in-wheel PMSM. The aim of this research was to demonstrate a hardware system of an in-wheel motor driver controller for rugged conditions. The STM32F103ZET6 was chosen as a chip for the control processor. The architecture was layered modular, and the design of a circuit incorporated the significant modules such as the power driver, power converter, opto-isolation, Hall signal filters, temp and humidity monitoring, protective and sampling modules, and the CAN communication. The driving system was realized by the IRFP4568PBF power MOSFET and IR2110 driver ensuring a bootstrap circuit. For the isolation, the 6N137 high-speed optocouplers and the 74HC14 Schmitt Trigger that cope with interference were chosen. The CAN Bus communication was realized through the TJA1050 transceiver to enable a

DOI: 10.54254/2755-2721/2026.33870

bidirectional connection with the controller in automotive systems, with the capability of real-time control data exchange.

The hardware design aims for the harsh operating conditions of in-wheel motors. The design's reliability was validated, and it provides essential engineering significance. It also serves as a foundation for hardware design related to control systems for distributed drives in new energy vehicles.

References

[1] Cheng M, Sun L, Buja G, et al. Advanced electrical machines and machine-based systems for electric and hybrid vehicles [J]. Energies, 2015, 8(9): 9541–9564.
[2] Wen X, Zhao K, Cheng Y. Review of in-wheel motor drive technology for new energy vehicles [J]. Proceedings of the CSEE, 2020, 40(18): 5914–5925. (In Chinese)
[3] Ifedi C J, Mecrow B C, Brockway S T M, et al. Fault-tolerant in-wheel motor topologies for high-performance electric vehicles [J]. IEEE Transactions on Industry Applications, 2013, 49(3): 1249–1257.
[4] Wang J, Li Y, Han Y. Integrated modular motor drive design with GaN power FETs for traction applications [J]. IEEE Transactions on Industrial Electronics, 2020, 67(9): 7082–7092.
[5] STMicroelectronics. RM0008 Reference Manual: STM32F101xx/102xx/103xx/105xx/107xx [R]. STMicroelectronics, 2023.
[6] Tenconi A, Profumo F, Bauer S E, et al. Temperatures evaluation in an integrated motor drive for traction applications [J]. IEEE Transactions on Industrial Electronics, 2008, 55(10): 3619–3626.
[7] International Organization for Standardization. ISO 11898-1: 2015 Road vehicles — Controller area network (CAN) [S]. ISO, 2015.
[8] NXP Semiconductors. TJA1050 High-speed CAN transceiver datasheet [R]. NXP Semiconductors, 2018.