Proceedings of the 4th International Conference on Mechatronics and Smart Systems
DOI: 10.54254/2755-2721/2026.32997

Functional Defect Detection of Industrial Parts Based on Machine Learning Algorithm

Caiyu Zou

College of Computer Science and Technology, China University of Mining and Technology, Xuzhou, China
l1215474060@163.com

Abstract. Under the background of deep integration of intelligent manufacturing and industrial automation, quality inspection of industrial parts is the key starting point to build a solid production safety defense line, improve product reliability and stabilize the supply of industrial chain. With its excellent data mining and feature extraction capabilities, machine learning has opened up a new path for functional defect detection of industrial parts, and is the core technical support to solve traditional detection problems. Aiming at the inherent defects of the current single machine learning algorithm in time series feature capture, nonlinear feature fitting and small sample detection scenarios, this paper proposes Transformer-LSTM-KELM classification algorithm and applies it to the task of functional defect detection of industrial parts, which helps the quality and efficiency of industrial quality inspection. First, the algorithm comparison experiment is carried out through correlation analysis and violin chart analysis. The results show that the accuracy, accuracy, recall and F1 value of the algorithm proposed in this paper all reach 96%, and its performance is significantly better than the traditional algorithms such as CatBoost, GBDT, random forest, extreme random tree, decision tree, XGBoost, AdaBoost and BP neural network. Compared with the weaker BP neural network, all four core indicators are improved by 10%, which is also 1% ahead of the optimal random forest in ensemble learning. The AUC value of this algorithm is 97%, although it is slightly lower than that of CatBoost and Extreme Random Tree, but according to various classification evaluation indexes, its classification performance is the most balanced and excellent, and its overall classification effect and generalization ability rank first among all comparison algorithms.

Keywords: Quality Inspection of Industrial Parts, Transformer, LSTM, KELM.

1. Introduction

With the deep integration of intelligent manufacturing and industrial automation, the quality inspection of industrial parts has become the core link to ensure production safety, improve product reliability and stabilize the supply of industrial chain [1]. As the basic component of high-end equipment, the functional integrity of industrial parts directly determines the running state and service life of the whole machine. The traditional detection method relying on manual visual inspection and simple measuring tools has many shortcomings such as low efficiency, strong

© 2026 The Authors. This is an open access article distributed under the terms of the Creative Commons Attribution License 4.0 (https://creativecommons.org/licenses/by/4.0/).

DOI: 10.54254/2755-2721/2026.32997

subjectivity, high missed detection rate and difficulty in adapting to large-scale production, which can't meet the demand of modern industry for high-precision and high-stability detection [2]. In a complex production environment, functional problems such as dimensional deviation, surface defects and abnormal material properties of parts and components are characterized by strong concealment and many related factors. It is difficult to achieve accurate identification by relying on traditional detection technology, and it is urgent to break through the bottleneck with efficient and intelligent detection technology and promote the transformation of industrial quality inspection to automation and intelligence.

With its powerful data mining and feature extraction capabilities, machine learning technology provides a brand-new technical path for functional defect detection of industrial parts, and becomes the key support to solve the pain points of traditional detection [3]. Machine learning algorithm can efficiently process multi-dimensional detection data such as size, vibration, noise and material performance collected by sensors, automatically mine the potential correlation between defect features and detection indicators, get rid of the limitation of manual feature screening, and realize the intelligence and standardization of defect identification. Through the learning and iteration of massive detection data, the machine learning model can quickly distinguish qualified products from defective products, greatly improve detection accuracy and efficiency, reduce labor costs, and at the same time realize quality traceability and abnormal warning of the production process, providing technical support for the whole process quality control of industrial production, and laying an algorithm foundation for accurate detection in complex industrial scenarios [4].

Aiming at the limitations of existing single machine learning algorithms in time series feature capture, nonlinear feature fitting and small sample detection, this paper proposes Transformer-LSTM-KELM classification algorithm for functional defect detection of industrial parts. The algorithm combines the global feature capture capability of Transformer, the advantages of timing-dependent feature learning of LSTM and the fast classification and generalization performance of kernel extreme learning machine, and can comprehensively extract spatial features and timing features in component inspection data, and accurately adapt to the characteristics of multi-source heterogeneity and complex feature association of industrial inspection data [5]. The algorithm optimizes the feature extraction and classification decision-making process through complementary advantages, effectively improves the accuracy and robustness of defect detection, reduces the probability of missed detection and false detection, can better meet the requirements of high-precision and high real-time detection in industrial sites, and provides a more efficient and reliable new solution for intelligent detection of functional defects of industrial parts.

2. Data sources

The data used in this paper covers multi-dimensional objective detection indicators such as dimensional parameters, surface quality, material properties, operating status and processing technology, and includes a complete detection data set of 710 samples. The target variables are labeled according to the real functional defect status of parts, of which the samples of qualified products account for about 85%, and the samples of products with functional defects account for about 15%. First, a correlation analysis was performed, and a correlation heat map was plotted, as shown in Figure 1.

DOI: 10.54254/2755-2721/2026.32997

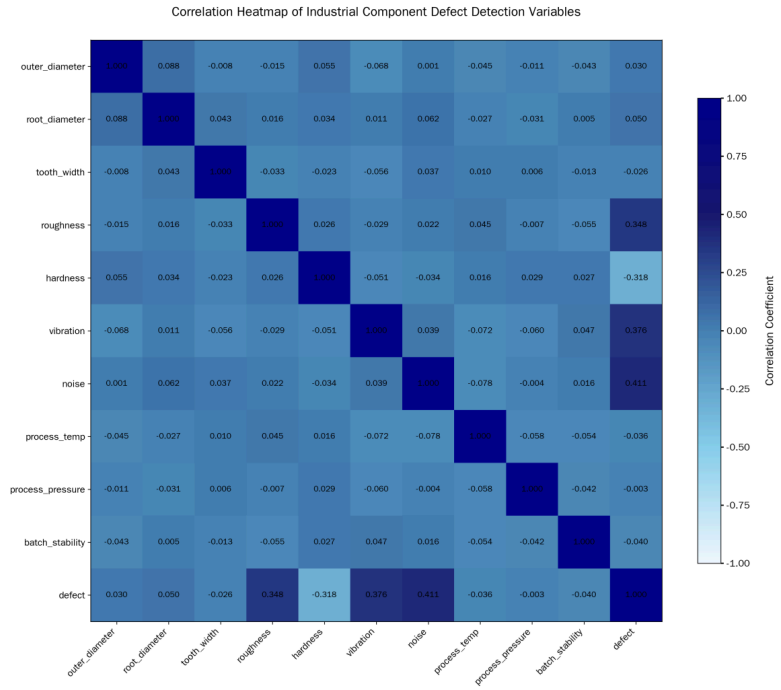

Figure 1. The correlation heat map

Violin plot analysis was performed on each variable and a violin plot was drawn as shown in Figure 2.

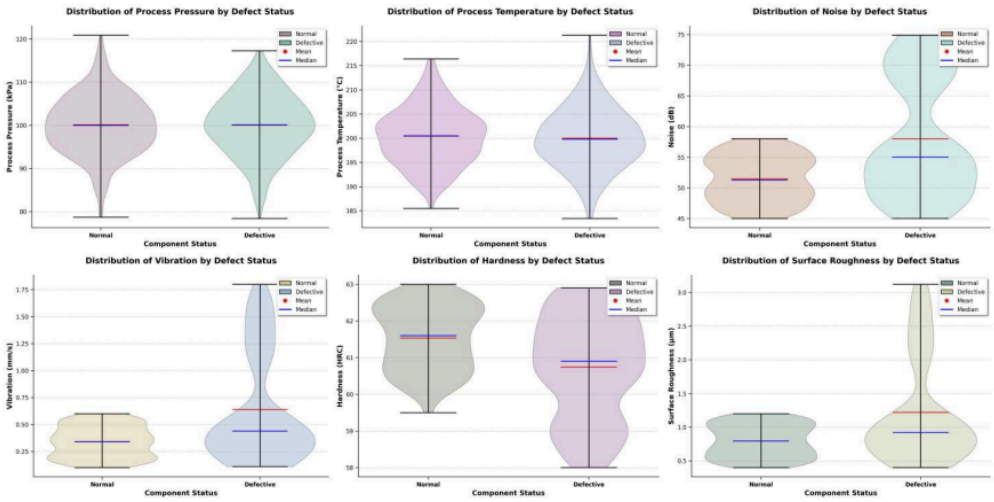

Figure 2. The violin plots

3. Method

3.1. Transformer

Transformer algorithm is built on the self-attention mechanism, completely abandons the loop structure, and improves the model processing efficiency through parallel computing. Its core structure includes an encoder and a decoder. The encoder is responsible for extracting the input sequence features, and the decoder generates the target sequence according to the encoded features

DOI: 10.54254/2755-2721/2026.32997

[6]. The multi-head self-attention mechanism can simultaneously capture multiple associated features of different positions in the sequence, and the position coding can supplement the position information of the sequence for the model, making up for the lack of position information caused by the acyclic structure. Feedforward neural network performs nonlinear transformation on attention output, and residual connection and layer normalization run through all layers of the network, effectively alleviating the gradient disappearance problem in deep model training [7]. The network structure of Transformer is shown in Figure 3.

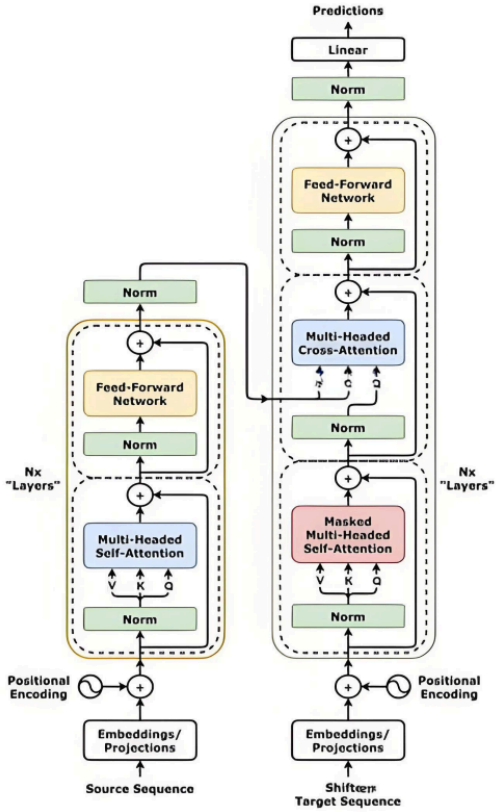

Figure 3. The network structure of Transformer

3.2. LSTM

LSTM algorithm is an improved version of recurrent neural network, which solves the problem of long-term dependence failure of traditional recurrent neural network through gating structure. Its core includes forget gate, input gate and output gate. The forget gate controls the retention degree of historical information and screens out useless timing features. The input gate determines the input proportion of new information at the current moment, and integrates the effective features into the cell state. The cell state is the core channel of information transmission, so as to realize the stable transmission of long-distance information. The output gate combines the current hidden state with the cell state to generate the final output feature [8]. The network structure of LSTM is shown in Figure 4.

DOI: 10.54254/2755-2721/2026.32997

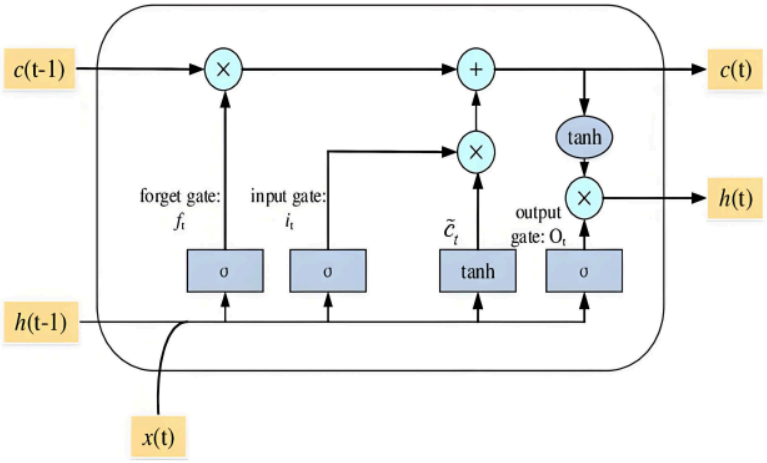

Figure 4. The network structure of LSTM

3.3. KELM

KELM algorithm, namely kernel extreme learning machine, is an efficient single hidden layer feedforward neural network algorithm based on the combination of extreme learning machine and kernel method. The algorithm does not need to iteratively adjust the hidden layer node parameters, and the weights between the input layer and the hidden layer are randomly generated and fixed. The weights of the output layer are directly calculated by the least squares method, which greatly improves the model training speed [9]. The kernel function replaces the hidden layer mapping process of traditional extreme learning machine, and maps the low-dimensional input data to the high-dimensional feature space to mine the nonlinear correlation between the data.

3.4. Transformer-ISTM-KELM

Transformer-LSTM-KELM classification algorithm combines the advantages of three models to build a composite architecture of hierarchical feature extraction and classification. First, the multi-head self-attention mechanism of Transformer is used to extract the global association features of sequence data and capture the long-distance dependency information [10]. Then, the output features of Transformer are input into LSTM network, and the local dynamic change law of time series data is further mined, so as to strengthen the expression effect of time series features. The fused deep features are input into KELM classifier, and the final classification decision is completed with the help of the nonlinear mapping ability of kernel function and the advantage of fast solution. The algorithm considers both global and local feature extraction efficiency.

4. Result

In the parameter setting of the Transformer-LSTM-KELM classification item, the ratio of the training set to the data set is 0.7, the number of input channels in the Transformer-LSTM model is the feature dimension of the data set, the maximum position coding is set to 512, the number of heads of the self-attention mechanism is 4, the number of key channels of each head is 32 and the total number of key channels is 128, the dimension of the LSTM layer is 6, the Dropout layer discard rate is 0.01, and the dimension of the fully connected layer is the number of categories of the data set; The model is trained using Adam optimizer, the maximum number of training rounds is 800, the number of batches is 256, the initial learning rate is 0.01, the learning rate decline factor is

DOI: 10.54254/2755-2721/2026.32997

0.1, the learning rate decline period is 650, the L2 regularization coefficient is 0.001, and the gradient clipping threshold is 10; The KELM partial regularization coefficient is set to 20, the kernel parameter is 6, and the kernel function type is rbf.

Output the index comparison results of each machine learning algorithm, as shown in Table 1. Output the index comparison histogram of the Transformer-LSTM-KELM test set, as shown in Figure 5.

Table 1. The results of the comparative experiment

Model	Accuracy	Precision	Recall	F1	AUC
CatBoost	0.949	0.949	0.949	0.949	0.978
GBDT	0.907	0.907	0.907	0.907	0.953
Random forest	0.953	0.953	0.954	0.953	0.964
ExtraTrees	0.939	0.939	0.945	0.939	0.978
Decision tree	0.93	0.93	0.93	0.93	0.93
XGBoost	0.949	0.949	0.949	0.949	0.967
AdaBoost	0.925	0.925	0.925	0.925	0.954
BP neural network	0.86	0.86	0.86	0.86	0.93
Transformer-LSTM-KELM	0.963	0.963	0.963	0.963	0.969

Comparing the experimental results of various machine learning algorithms, it can be seen that the Transformer-LSTM-KELM algorithm proposed in this paper reaches 96% in accuracy, recall rate and F1 value, which is significantly better than the traditional algorithms such as CatBoost, GBDT, random forest, extreme random tree, decision tree, XGBoost, AdaBoost and BP neural network. Compared with the poor BP neural network, all four indicators are 10% higher, and it is also 1% ahead of the best random forest among the ensemble learning algorithms. Although its AUC value is 97%, slightly lower than the 98% of CatBoost and extreme random tree, based on various classification evaluation indicators, Transformer-LSTM-KELM still has the most balanced and excellent classification performance, and its overall classification effect and generalization ability rank first among all comparison algorithms.

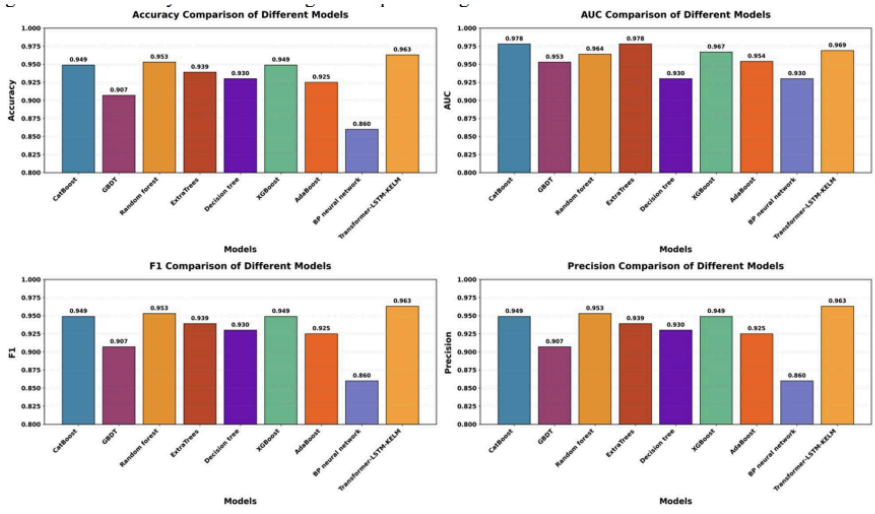

Figure 5. The index comparison histogram of the Transformer-LSTM-KELM

DOI: 10.54254/2755-2721/2026.32997

5. Conclusion

Under the background of deep integration of intelligent manufacturing and industrial automation, quality inspection of industrial parts is the key starting point to build a solid production safety defense line, improve product reliability and stabilize the supply of industrial chain. With its excellent data mining and feature extraction capabilities, machine learning has opened up a new path for functional defect detection of industrial parts, and is the core technical support to solve traditional detection problems. In view of the shortcomings of single machine learning algorithm in time series feature capture, nonlinear feature fitting and small sample detection scenarios, this paper constructs and applies Transformer-LSTM-KELM classification algorithm to detect functional defects of industrial parts. First, experimental verification is carried out through correlation analysis and violin chart analysis. The results show that the accuracy, accuracy, recall and F1 value of this algorithm all exceed 96%, and its performance far surpasses conventional algorithms such as CatBoost, GBDT, random forest, extreme random tree, decision tree, XGBoost, AdaBoost and BP neural network. Compared with the worst BP neural network, the four core indicators are 10 percentage points higher, and it is 1 percentage point ahead of the optimal random forest in ensemble learning. Even though its AUC value is 97%, which is slightly lower than the 98% of CatBoost and extreme random tree, according to various classification evaluation indicators, the classification performance of this algorithm is the most balanced and excellent, and the overall classification effect and generalization ability lead all comparison algorithms. This research result is the defect intelligence of industrial parts It has strong engineering application and popularization value.

References

[1] Liu, Qiang, et al. "A fabric defect detection method based on deep learning." IEEE access 10 (2022): 4284-4296.
[2] Li, Wenhao, et al. "Deep learning based online metallic surface defect detection method for wire and arc additive manufacturing." Robotics and Computer-Integrated Manufacturing 80 (2023): 102470.
[3] Khanam, Rahima, et al. "A comprehensive review of convolutional neural networks for defect detection in industrial applications." IEEE Access 12 (2024): 94250-94295.
[4] Li, Yuxing, et al. "A defect detection system for wire arc additive manufacturing using incremental learning." Journal of Industrial Information Integration 27 (2022): 100291.
[5] Bilal, Hazrat, et al. "Online fault diagnosis of industrial robot using IoRT and hybrid deep learning techniques: An experimental approach." IEEE Internet of Things Journal 11.19 (2024): 31422-31437.
[6] Xie, Yongfang, et al. "Surface defect detection algorithm based on feature-enhanced YOLO." Cognitive Computation 15.2 (2023): 565-579.
[7] Sahu, Atma Ram, Sanjay Kumar Palei, and Aishwarya Mishra. "Data-driven fault diagnosis approaches for industrial equipment: A review." Expert Systems 41.2 (2024): e13360.
[8] Liu, Yu, et al. "A rail surface defect detection method based on pyramid feature and lightweight convolutional neural network." IEEE Transactions on Instrumentation and Measurement 71 (2022): 1-10.
[9] Xu, Rongge, Ruiyang Hao, and Biqing Huang. "Efficient surface defect detection using self-supervised learning strategy and segmentation network." Advanced Engineering Informatics 52 (2022): 101566.
[10] Cen, Jian, et al. "A review of data-driven machinery fault diagnosis using machine learning algorithms." Journal of Vibration Engineering & Technologies 10.7 (2022): 2481-2507.