Proceedings of CONF-MSS 2026 Symposium: Mechanical Control and Automation
DOI: 10.54254/2755-2721/2026.BJ31458

A Preliminary Study on the Current Situation, Challenges and Innovations of Small Mobile Lithium Battery Protection Solutions

Chumin Peng

School of Intelligent Engineering, Xi 'an Jiaotong-Liverpool University, Suzhou, China
chumin.peng24@student.xjtlu.edu.cn

Abstract. Lithium-ion batteries are increasingly widely used in consumer electronics due to their high energy density, long life and high-power density, and various protection schemes have emerged, but there is still a mixture of good and bad. For this purpose, research was conducted in combination with the mainstream protection schemes for lithium-ion batteries, the international standards that electronic products need to follow, the actual functional requirements of the products, and their satisfaction. The current status of protection schemes for lithium batteries and the core requirements of international standards were sorted out. The characteristics of each scheme were introduced in detail mainly by means of information collection, organization and classification comparison, and feasible solutions were given in response to the challenges in practical applications. A detailed discussion of the physical basis of the scheme was provided. The implementation of the scheme could be in the form of a semiconductor chip design, that is, a hardware approach; it can also be implemented based on certain hardware and combined with software. Finally, emphasize the considerable universality of the solution and predict the application prospects.

Keywords: AFE Simulation Front End, DFE Digital front-end, BMS Battery management system, Thermal protection for lithium batteries

1. Introduction

Some of the lithium-ion battery management chips or FE+MCU solutions for portable products at home and abroad have sampling resistors for the size of the sampling current, and some do not monitor the current at all. But regardless of which one, one problem is overlooked, that is, the protection of the battery cell by the short peak pulse current discharge. Since the spike current neither triggers short-circuit protection nor overcurrent protection, but this spike pulse discharge may damage the separator inside the cell, almost all schemes ignore this pulse current. The continuous large current discharge (without triggering a short circuit) will also generate a lot of heat inside the cell, but the heat transfer system is lagging. How long it takes for the heat generated by this Ohm's law to manifest as a temperature rise on the cell surface should be tracked and recorded, and the ohmic heat it generates should be evaluated before the cell surface temperature rises. The research method involves collecting data and conducting comparative experiments, recording

© 2026 The Authors. This is an open access article distributed under the terms of the Creative Commons Attribution License 4.0 (https://creativecommons.org/licenses/by/4.0/).

DOI: 10.54254/2755-2721/2026.BJ31458

phenomena, analyzing causes, proposing hypothetical schemes, and verifying them. The research process mainly involves observing and recording discharge currents of different amplitudes or pulse widths, loading the cells to be studied, observing the degree of damage to the cell separator, and seeking the correlation between the ohmic heat of the pulse discharge and the degree of separator damage. The study provides a safety guarantee for future high-power applications of lithium batteries. The scheme can be verified to be effective by using a spike pulse current discharge as an experiment. If the millisecond-level spike of large current is not intervened, traces of damage to the cell separator can be observed after the test, and the method of integrating the spike pulse current for judgment and protection can avoid the damage to the separator as much as possible.

With the continuous development of electrochemical technology, the energy density of lithium-ion batteries is getting higher and higher, and their application fields are becoming more and more extensive, such as in the field of electric vehicles, commercial and household energy storage, portable electronic products, etc. In terms of capacity share, lithium batteries are undoubtedly the most used in electric vehicles. However, on the other hand, portable electronic products, though consuming less lithium battery capacity, are indeed the product category that reaches the broadest consumer base and has the widest range of users, regardless of gender or age; it is precisely because of this that the safety of portable lithium battery products becomes particularly important. At the same time, the misuse of lithium-ion batteries can lead to shortened lifespan, battery damage and, in severe cases, safety issues. The battery management system is designed to ensure that the individual cells inside the managed lithium battery operate within their own safe working zone, which is the same for both small portable products and large-scale lithium-ion battery systems [1].

One very important function in a battery management system (BMS) is thermal management. The thermal management system ensures that the battery operates within a reasonable temperature range. The heat within the battery pack mainly consists of the heat generated during electrochemical reactions, joule heat/ohmic heat (I^2R), and other reversible and irreversible reactions that occur on the electrode plates. The rate of electrochemical reactions increases exponentially with temperature. Typically, for every 10 °C increase in temperature, the rate of electrochemical reactions doubles, but the rate of heat dissipation of the battery pack only changes linearly with temperature. Therefore, battery thermal runaway can cause catastrophic explosion accidents [2]. Therefore, it is entirely necessary for the BMS system to pay attention to any link that may generate heat. As analyzed by the various existing BMS protection architectures. There is attention to continuous high-current discharge or charging processes, but there is a lack of effective means for extremely short pulse discharges, and they are even conceptually ignored. This article explains the existing protection schemes and their comparisons, the relevant international standards, and the predicament currently faced by the industry, and finally present a feasible solution.

2. Examples and analyses of existing lithium battery protection solutions for portable products

2.1. Dedicated analog integrated circuit solutions

2.1.1. Schemes with built-in BMS boards for power protection elements

SONY Corporation of Japan was the creator of commercializing lithium-ion batteries, so for many years after that, Japanese semiconductor companies launched a lot of lithium-ion battery protection chips. Typical Japanese companies such as MGM, Ricoh, ROHM and Texas Instruments, the world's largest supplier of lithium battery protection chips, have used the BQ series most widely. Here is an example of Japanese lithium battery management chips for explanation:

DOI: 10.54254/2755-2721/2026.BJ31458

(1) Ricoh R5436 of Japan

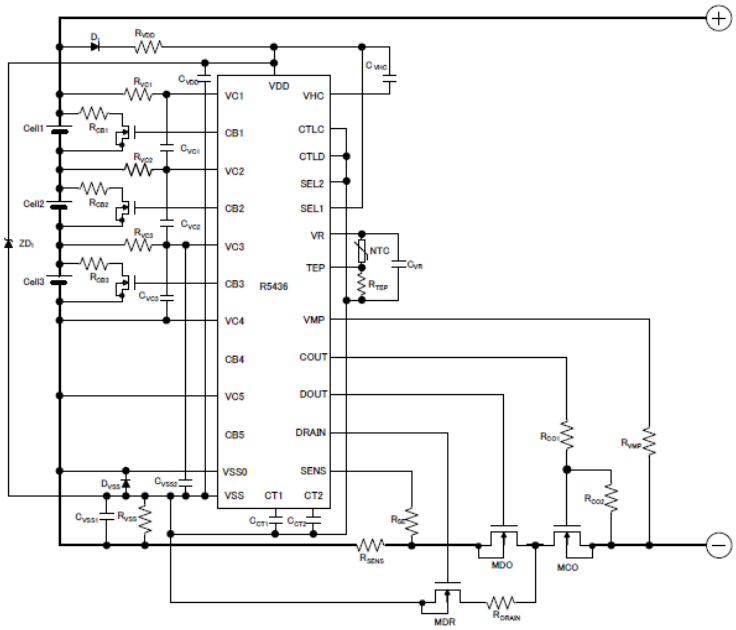

Figure 1. R5436 typical application diagram [3]

The R5436 shown in Figure 1 is an overcharge, overdischarge and overcurrent protection IC for rechargeable lithium-ion/lithium-polymer batteries. It can detect overcharge, overdischarge, discharge overcurrent and charge overcurrent for 3 to 5 lithium cells. The R5436 has a battery balancing function to address the imbalance of series-connected batteries. It can be cascaded for more than six rechargeable cells.

Here, products from two Chinese brands are also listed and introduced by Semiconductor Manufacturing International Corporation.

(2) SEMI CW1353

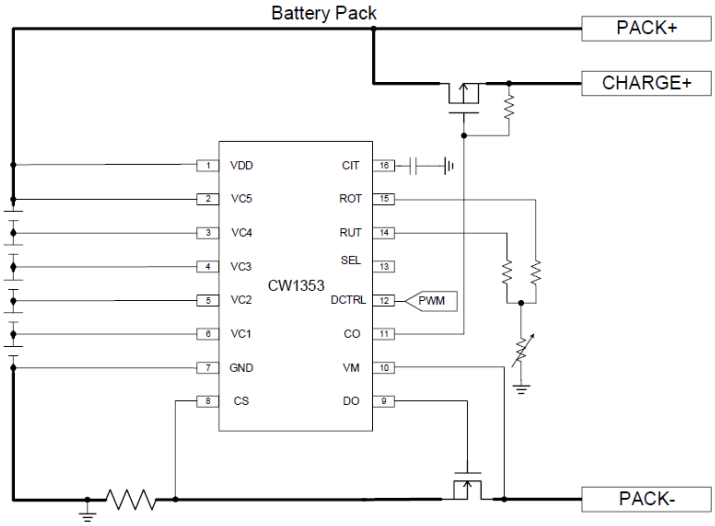

Figure 2. CW1353 typical application diagram [4]

DOI: 10.54254/2755-2721/2026.BJ31458

The CW1353 series shown in Figure 2 is a lithium battery protection chip with a built-in high-precision detection circuit and delay circuit, suitable for 4- to 5-string lithium-ion or lithium-polymer battery packs. It provides overcharge detection, overdischarge detection, overcurrent detection, equalization, disconnection detection, and protection against high and low temperatures during charging and discharging for lithium battery packs.

Both of the typical solutions have the power components that control charging and discharging built into the BMS board, which is highly integrated but also faces the problem of MOSFET overheating.

2.1.2. Schemes with external power protection components on the BMS board

(1) China Resources Microelectronics Company PT66051

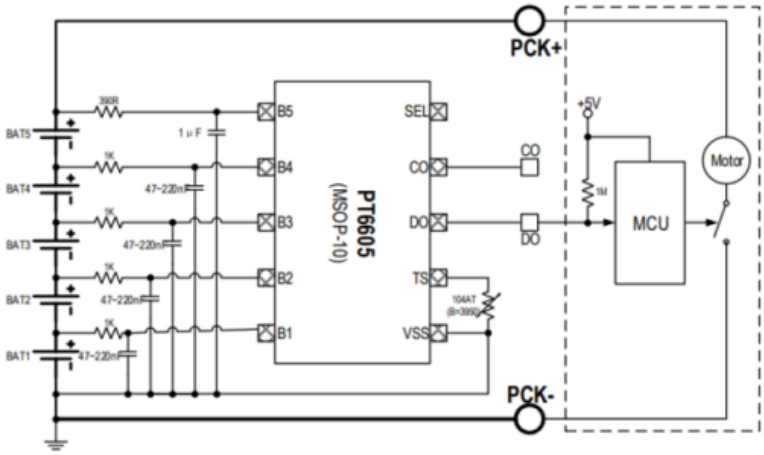

Figure 3. PT6605 typical application diagram with load

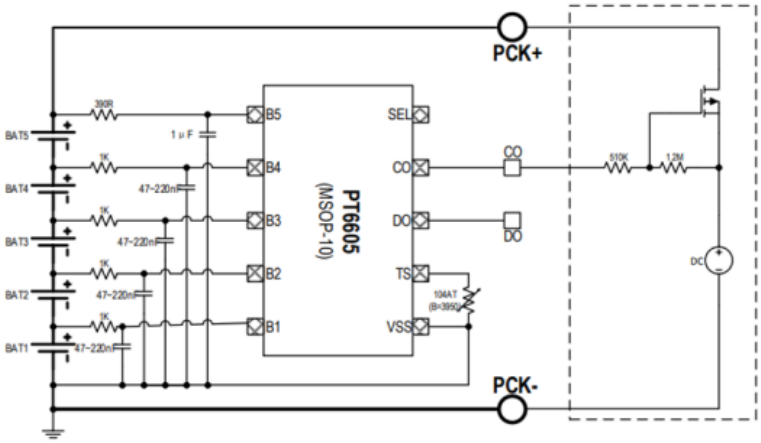

Figure 4. PT6605 typical application diagram with charger [5]

Figure 3 and Figure 4 are complete descriptions of the PT6605 application example, the BMS system and the topological structure when the discharge system is combined with the charging system. It is obvious that this type of domestic chip usually does not have the charging/discharging MOS built into the BMS board. This is to prevent the heat generated by the power MOSFET during charging and discharging from heating the lithium cell. It only outputs control signals or enable

DOI: 10.54254/2755-2721/2026.BJ31458

signals from the BMS system to control the charger and shut off the charging process when it is necessary to stop charging.

For the same reason, for the discharge process, the protection chip sends out a type of control signal to alert the discharge control unit to stop the motor on the one hand and derate the output current on the other.

2.2. Digital chip solution for DFE/AFE+MCU

2.2.1. A foreign brand front-end chip +MCU solution

From the previous analysis, it can be known that all the above schemes are hardware-based control schemes. Although they are simple to apply and low in cost, they also have obvious shortcomings, namely the lack of flexibility and the inability to achieve human-computer interaction functions. Thus, the scheme of front-end (analog front-end and digital front-end) with MCU emerged in this field. The combination of Texas Instruments' BQ29311 and BQ2083 can be regarded as one of the earliest explorations in this industry. It has a long history and once had a market share of over 80% in the field of battery management in laptops. But now the BQ769X2 series is the mainstream product.

(1) Texas Instruments DFE (Digital Front End) + general-purpose MCU solution BQ76905

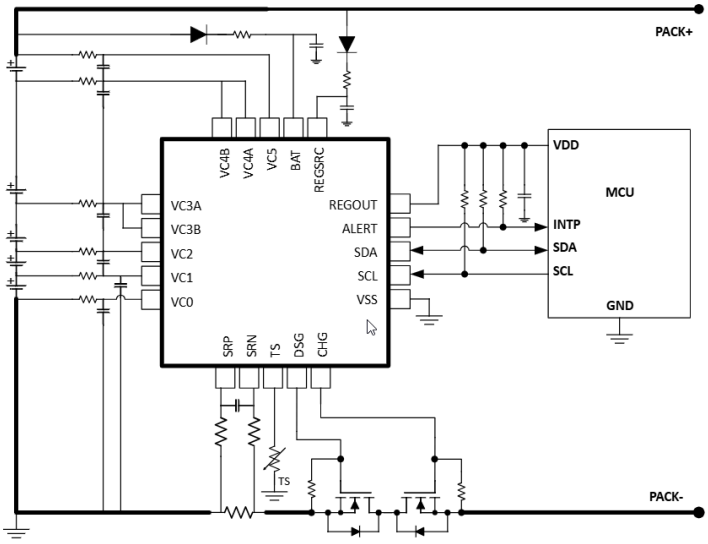

Figure 5. BQ76905 typical application diagram with MCU [6]

The BQ76905 shown in Figure 5 is the latest series of analog front-end from TI, which supports 2-5S battery packs and has many advantages, such as high sampling accuracy, low power consumption, rich protection functions, support for off-sequence power-on, an integrated low-side driver, an integrated LDO and an internal equalization circuit, and is widely used in vacuum cleaners, power tools, and BMS solutions for a wide range of applications, including drones.

2.2.2. Chinese brand DFE/AFE+MCU solutions

In recent years, many innovative companies have emerged in the domestic semiconductor design industry. Their domestic models are not large, but they are bold in innovation and appear bolder in design. A typical example is that on the basis of imitating foreign lithium battery protection

DOI: 10.54254/2755-2721/2026.BJ31458

solutions, they even integrate the front-end chip and MCU in the same chip package. Although the semiconductor processes of the two parts cannot be integrated on the same wafer, some breakthroughs have been made in the packaging technology, some by placing the wafers side by side and some by using the stacking process to reduce the packaging area. Here are a few typical products.

(1) Zhongying Electronics SH39A325

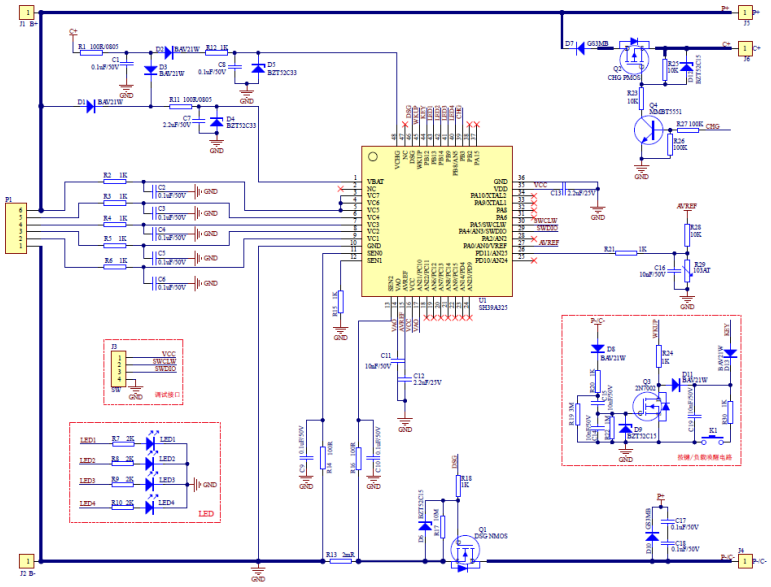

Figure 6. SH39A325 typical application diagram with load [7]

Figure 6 shows that SH39A325 is a programmable intelligent lithium battery management chip for lithium-ion and lithium-polymer batteries, suitable for 3- to 7-string lithium battery applications, with an integrated AFE and MCU inside. AFE supports 5V LDO output, multi-channel cell voltage conversion, two-channel current conversion, charger voltage conversion, chip internal temperature conversion, short-circuit protection, discharge MOSFET drive and other related functions, and achieves battery pack system management such as voltage protection, current protection, disconnection detection, and charger detection in conjunction with the MCU.

This AFE+MCU solution is highly flexible, in which the MCU plays an important role, and the unique functional characteristics of the MCU also make it possible to differentiate the application of the system. It can be seen from the circuit topology diagram that the scheme adopts a positive terminal split design; the charging positive terminal and the discharging positive terminal are not on the same port but share the negative terminal of the battery pack.

All of the above schemes can be seen as relatively simple equalization functions, and passive equalization. Passive equalization, or energy dissipation equalization, is achieved by converting the excess energy inside individual cells into heat energy through energy dissipation components, thereby improving the voltage and charge inconsistencies between individual cells. Passive equalization often uses switching resistance [8] equalization control, which can control the consistency of the remaining capacity/state of charge of each battery, helps to avoid further deepening of the degree of inconsistency in battery capacity, internal resistance, etc., and prevents the vicious cycle of battery equalization [9]. The importance of this balancing behavior is particularly significant in portable products with large current and small capacity, such as lithium battery packs for handheld power tools and garden tools, where the battery discharge rate reaches 15

DOI: 10.54254/2755-2721/2026.BJ31458

times or even 20 times the capacity, and the large current discharge behavior can affect the balancing characteristics of the cell. In general, in relatively complex lithium battery application systems, it is very important to simulate, predict or even monitor the chemical characteristics or parameters of the cells, such as capacity status, cell balance, and state of charge and health status, all of which require a large amount of computational sensor monitoring parameters as conditions for calculation and control [10-12]. However, as small portable products, overly complex systems are not suitable for both portability and cost considerations, so the above relatively simple static parameter measurements are widely used.

2.3. The impact of international and Chinese national standards in the field of lithium batteries on protection schemes

Above, for two architectures of lithium-ion battery management solutions mainly applied to portable products at home and abroad, this article provides a brief introduction to the product solutions of several brands one by one. It can be seen that domestic brands have basically achieved quality substitution. There may still be some gaps in the areas of precision and low power consumption, but the basic functions can meet the application requirements of the industry.

However, it should also be noted that China, as a major producer of lithium batteries, is still in the process of tracking international standards and absorbing and converting them in the field of lithium-ion battery application technology standards. On the one hand, this is to improve the quality and safety of domestic products; on the other hand, it is to bring export products in line with international standards and comply with local laws and regulations.

At present, internationally, in the field of small portable products powered by lithium batteries, there are two relatively core standards, namely the household appliance industry standard IEC60335 and the power tool industry standard IEC62841, and the newly introduced national standard in China is GB31241. China's national standard GB31241 covers portable products, power tools, e-cigarettes and other lithium battery products. In summary, GB31241 emphasizes dual-channel redundancy design; that is, the current and voltage of lithium batteries should be measured and monitored in two channels, while the temperature can be measured in one channel. The international standard IEC60335 for household appliances requires dual-channel measurement and monitoring of current, voltage and temperature [13-15].

For this reason, it is necessary to explain clearly what dual-channel redundancy is. Redundant design, also known as redundancy design techniques, refers to the addition of one or more functional channels, working elements, or components that perform the same function for the parts of a system or equipment that play a critical role in completing the task. The purpose of such a design is to ensure that the entire system or equipment remains functioning properly when one part fails, thereby reducing the probability of failure of the system or equipment and enhancing its reliability.

In the field of aviation, the application of redundant systems in aircraft design is particularly important. For example, an aircraft that requires two engines to operate normally may actually be equipped with at least four engines. With redundant design, even if one or two engines fail, it won't cause an airplane crash or a major accident.

Redundant systems are also widely used in life. Take the heavy-duty truck for transporting goods as an example. The rear tire design of the truck is loaded with at least two tires on one side of each bearing. Such a design is intended to ensure that the entire vehicle remains stable if one of the tires fails.

Dual-channel redundancy design is an engineering strategy that enhances overall system reliability and fault tolerance by providing two separate channels, such as physical links,

DOI: 10.54254/2755-2721/2026.BJ31458

communication buses, or system paths. The core principle is to avoid a single point of failure and ensure that when one channel fails, the other channel can take over seamlessly to keep the system running.

Take the working current of a lithium battery (which has both discharge current and charge current) as an example. This current requires two separate sampling mechanisms, which means two current sensors are needed. At the same time, two separate current quantification or logical judgment mechanisms are needed. Finally, two separate current turn-off mechanisms are needed. Among them, it can be seen that the keyword is "independent", that is, the failure of any set of sampling, logical judgment and control mechanisms will not affect the performance of the other set of mechanisms, this is the dual-channel redundancy design. The same goes for voltage and temperature, which require a dual-channel redundancy design.

But looking back at all the lithium battery management schemes mentioned above, none of the single schemes can achieve dual-channel redundancy. So how can we achieve low-cost, reliable and full dual-channel? It can be understood against the requirements of the relevant standards, which require dual-channel monitoring of current, voltage and temperature during both charging and discharging. The battery pack is just a carrier of energy. The core executor in the charging process is the charger, and the core executor in the discharging process is the load. So during the charging process, the battery pack and the charger can be considered as an integrated system. They are combined and each undertakes part of the parameter monitoring function. This way, there won't be too many components piled up on the BMS board inside the battery pack, which would result in increased power consumption, higher temperature rise and additional risks. For the same reason, during the discharge process, consider the battery pack and the load as a whole, both of which share the dual-channel monitoring function of current, voltage and temperature during the discharge process, and make full use of the electronic components in the load to carry out sensing, computing, judgment and even execution processes. This reduces both component consumption and unnecessary power consumption. The specific implementation details require a flexible and ingenious design based on the control architecture of the battery pack, charger and electrical appliance (load); the path of electrical energy to chemical energy, the path of chemical energy to electrical energy or mechanical energy, and the power interface and signal interface among the three.

As long as the logical structure is clear, the single failure verification is sufficient and reliable, and the relevant drawings and software program flowcharts are provided, it is entirely possible to obtain confirmation from the relevant certification body and obtain the relevant international certification.

3. Technical challenges faced by portable product power battery protection solutions

In fact, with the continuous development of lithium battery technology, the capacity of individual cells is getting higher and higher, and the discharge rate is getting higher and higher. However, traditional lithium battery management systems are often based on the monitoring of long-term steady-state electrical parameters, but the monitoring of current, especially fluctuating, instantaneous large current, is lacking. At best, there is the identification of short-circuit current, and the accuracy is often not high. But it is precisely this momentary high current that is extremely harmful to the cell. Excessive momentary high current discharge may damage the separator between the positive and negative electrodes inside the cell, causing an internal short circuit. At this time, no matter how complex the external protection circuit is designed, it is in vain because the current generates a huge amount of heat inside the cell, which may cause the cell to catch fire, burn or even explode.

DOI: 10.54254/2755-2721/2026.BJ31458

The reason why the destructive nature of the instantaneous current is emphasized is that many of the existing protection schemes are derived from the lithium battery protection schemes of the former IT products, and the load of IT products is relatively stable and there are few opportunities for instantaneous large current discharge. But nowadays, many load conditions are extremely harsh. For power systems like electric tools, it is common to have discharges of tens of amperes or even hundreds of amperes in an instant, and the continuous discharge current is also very large, with discharge rates reaching ten times or even fifteen or twenty times the rated capacity. Because of the short discharge time, the heat generated inside the cells cannot be transferred to the surface of the cells in time; that is to say, temperature monitoring does not work. At the same time, the existing current schemes either fail to reach the threshold for initiating protection or the duration of the current pulse is too short for the monitoring system to react in time and miss the protection opportunity, and such discharge occurs frequently, which is very dangerous for the entire lithium battery power supply system.

To sum up, there are two problems with the current protection scheme: (1) The instantaneous large current is too short to trigger the external short-circuit protection and is easily overlooked by the management system, hiding the potential risk. (2) Due to the structure of the lithium battery, the heat generated inside the cell is difficult to conduct to the cell shell in time to be monitored by the temperature sensor, so the current that is not sufficient to trigger overcurrent protection may be ignored, but this current may already cause damage to the separator and even cause an internal short circuit.

4. Ways to improve the current protection schemes for portable lithium battery products

4.1. Management of instantaneous high current pulse discharges

For large instantaneous currents, in addition to fuses or short-circuit current mechanisms, consider making full use of the presence of sampling resistors, not just simply setting short-circuit current thresholds, using comparators. It is also possible to consider integrating the square of the current over time. Since it is an integral value for a short period of time, a hardware integration scheme can be adopted. For the continuous high pulse current within a short period of time, the integral value accumulates. When the accumulated integral value exceeds a certain limit value, the external protection mechanism will be triggered. There are two measures taken by the protection mechanism: (1) Cut off discharge and fall back; (2) Derating discharge, that is, using a certain degree of linearity to reduce the size of the discharge current. The logic behind it is still the most fundamental Ohm's law, because when the square of the current is integrated over time, it is considering the heat generated by the current in real time, and the accumulation of the integral values is calculating the cumulative effect of the heat. When the heat is too large and may cause harm, corresponding protective measures should be taken. Set a moving time window when the integral value outside this time window can be reset to zero, because the accumulated heat over a long period will inevitably manifest as a temperature rise on the cell shell, detected by the temperature sensor, and then introduced into the protection decision scheme.

That is to say, the thermal damage to the cell caused by the spike pulse discharge is evaluated based on the concept of the hardware current square operation plus integral accumulation, and the accumulated integral value is used to trigger the protection action.

DOI: 10.54254/2755-2721/2026.BJ31458

4.2. Management of continuous discharge currents that do not trigger short-circuit protection or overcurrent protection

Generally, the heat conduction of a system often has a Nonlinear characteristic of delay, and the physical and chemical structure of lithium batteries is no exception. For this reason, the assessment scheme that solely relies on the surface temperature of the battery cells is also imperfect and risky. Therefore, the continuous discharge current that does not trigger short-circuit protection or overcurrent protection needs to be effectively managed, as this level of current also generates heat. Based on the same principle, the front-end chip (AFE/DFE) combines the current sampling resistor to calculate the square value of the current and pass it to the back-end MCU. The MCU performs window translation and in-window integration. The width of the window is based on the current time and extends backward to a certain time period in the past. The length of this time period is determined by the physical structure of the cell. The faster the heat conduction, the narrower the width of this time window, which means that the heat generated inside the cell is more easily conducted to the surface of the cell. Conversely, the wider the window, the greater the square of the current accumulated by the integration. The determination of this time window is recommended to be confirmed using the DOE (Experimental Design) method. As a provider of lithium battery management chips, we can leverage our electrochemical understanding to confirm based on the nominal capacity of the cells, the discharge rate, and the geometric packaging of the cells for reference by battery pack designers. Of course, this part is implemented in the back-end MCU software, where the limits of energy represented inside the integration window are determined based on the maximum temperature that the cell can withstand.

5. Conclusion

In summary, it is to monitor the heat generated inside the cell in real time according to Ohm's law, assess whether the discharge current is appropriate, and if it exceeds a reasonable limit, control the discharge process, either stop the discharge or reduce the discharge current, and discharge behavior that is far away from the current time.

The heat generated is characterized by the temperature of the cell's casing, which is taken over by the temperature sensor, while the cumulative data of the integration is "squeezed" out of the time window. The algorithm is a memory of the past period of discharge behavior and accumulates to the present, accurately monitoring the heat generated at every moment, not relying entirely on the temperature sensor, avoiding the risk of temperature transfer lag, and striking a balance between the battery's safety and superior discharge performance, with a certain degree of intelligence.

There is no doubt that the above algorithmic architecture is scientific, but there are some issues that need to be further studied, that is, what should be the limit value of heat generated inside the telecommunications within a certain duration, which needs to be determined based on the physical parameters of the cell itself and through multiple actual tests, such as the DOE (Experimental Design) method to determine the limit, If the limit is too small, it will affect the performance of the battery pack product; if it is too large, it will not provide protection. The above is a physical solution but does not involve the mathematical limits of this solution.

References

[1] Davide Andrea. (2021) Translated by Li Jianlin, Li Bei, Fang Kai et al. Large-scale lithium-ion battery management systems.

DOI: 10.54254/2755-2721/2026.BJ31458

[2] Christopher D. Rahn. Wang Zhaoyang. (2022) Translated by Hui Dong, Li Jianlin, Guan Yibiao et al. Battery Modeling and battery management System design.
[3] Ricoh Corporation. (2012) Ricoh R5436 Product Data Sheet. https: //www.e-devices.ricoh.co.jp/en/ Contact us.
[4] Semisemiconductor technology co., LTD. (2018) Semisemiconductor Technology co., LTD. CW1353 product data book. www.cellwise-semi.com
[5] China resources microelectronics co., LTD. (2023), China resources microelectronics company PT6605 product data sheet. https: //www.crmicro.com/BMSIC
[6] Texas Instruments, Inc. (2021) Texas Instruments BQ76905 Product Data book. www.ti.com
[7] Zhongying Electronics Co., LTD Ying electronics co., LTD in SH39A325 product data manual. https: //www.sinowealth.com.cn
[8] Xiong Rui. (2021) Core Algorithms for Power Battery Management (2nd Edition). Machinery Industry Press.
[9] Talent Exchange Center of the Ministry of Industry and Information Technology. (2018) Design and Development of Electric Vehicle Battery Management System by NXP (China) Management Co., LTD., Electronics Industry Press.
[10] Dubarry, M., et al. (2007) Capacity and Power Fading Mechanism Identification from a Commercial Cell Evaluation. Journal of Power Sources, Vol. 165, pp.566-572.
[11] Barsukov Y., Battery Cell Balancing: What to Balance and How, Texas Instruments.
[12] Ander D., Appel C., Soczkaguth T., et al. (2013) Advance mathematical method of SOC and SOH estimation for lithium-ion battery [J] Journal of Power Sources, 224 (5): 20-27.
[13] China electronics technology standardization institute. (2024) GB31241 portable electronic products with lithium-ion batteries and battery safety technical specifications. www.cesi.cn/page/index.html
[14] International Electrotechnical Commission. (2024) IEC 60335-1 safety standards for household appliances and similar. www.iec.ch
[15] International Electrotechnical Commission. (2024) IEC 62841-1 safety standard for electric hand tools, movable tools and lawn and garden tools. www.iec.ch