Proceedings of CONF-MSS 2026 Symposium: Mechanical Control and Automation
DOI: 10.54254/2755-2721/2026.BJ31416

Optimization Scheme for the Wind-Solar-Storage Link in Smart Grid Systems

Shengyu Huang

Guangzhou Institute of Science and Technology, Guangzhou, China
hsy13600075155@outlook.com

Abstract. Nowadays, energy problems are becoming increasingly serious, and the use of distributed generation technology based on renewable energy has become the main direction for future energy development. At present, wind and solar energy in renewable energy sources, have the disadvantages of intermittency and instability, resulting in unstable power supply and excess resources in new energy microgrids. Therefore, through new energy structure optimization and complementary methods, it is possible to fully utilize the advantages of the geographical environment and improve the energy problems encountered in current wind and solar energy storage and power generation. This article is based on the principle of hybrid operation of wind, solar and energy storage in smart grids, and focuses on three energy optimization strategies that are currently widely used in the world: multi energy complementarity, source grid load storage, and multi grid integration and interconnection, Attempt to analyze the principles and characteristics of three optimization schemes, namely Hainan Multi Energy Complementary Island Microgrid, Zhangbei Demonstration Project, and Xiong'an Urban Computing Center, as well as their achieved effects and advantages, And proposed hypotheses and prospects for the optimization of future smart grids, providing some directions and theoretical basis for the optimization of wind, solar, and energy storage in smart grids in the future.

Keywords: New energy, wind and solar storage, multi-energy complementary, source network load storage, multi-network interconnection

1. Introduction

With the continuous development of power electronics technology and the increasing demand for energy in China, the research and development of smart grids (SGs) have reached unprecedented heights. In recent years, in order to achieve energy transformation, reduce load losses in the power grid, and improve energy utilization efficiency, renewable energy sources such as wind and solar energy have gradually become the main sources of power supply for the power grid. Wind solar energy storage (ES) hybrid operation technology has also become a crucial part of the power grid system [1]. The microgrid constructed through wind and solar ES operation and the large grid complement each other, greatly improving the quality of electricity and enhancing economic benefits. However, the supply of solar and wind energy has the characteristics of randomness and fluctuation, which have a significant impact on the stable supply of energy to the power grid.

© 2026 The Authors. This is an open access article distributed under the terms of the Creative Commons Attribution License 4.0 (https://creativecommons.org/licenses/by/4.0/).

DOI: 10.54254/2755-2721/2026.BJ31416

Finding an efficient way to fill the energy gap or utilize energy efficiently has become a major goal for countries around the world in new energy generation.

This article mainly elaborates on the current development status of wind power generation (PG), photovoltaic PG, and ES technology, analyzes the system architecture of wind solar ES microgrids, and examines the typical structure and PG principles of distributed PG. At the same time, this article also analyzes the PG principles and ES methods of light energy, wind energy, and solar ES. From now on, through case studies and analysis, it will discuss the problems and challenges faced by wind and solar ES. And provide theoretical basis references for each link of wind and solar ES and PG, summarize and generalize three optimization schemes: multi-energy complementarity, source grid load (SGL), and multi-grid integration, and put forward their own optimization suggestions, providing some directions for the development of wind and solar ES and PG.

2. Theoretical analysis of wind-solar-storage in SG

2.1. Meaning of SG

The essence of SG is to integrate modern information technology into the energy grid, thereby achieving higher controllability of the grid, real-time tracking, and timely safety regulation of the grid's status and dynamic changes [2,3]. Meanwhile, through modern communication technology, comprehensive monitoring of customer electricity usage can be achieved. In summary, SG is a new type of power grid system formed by the combination of modern communication technology and the power system, complementing each other.

SG can also be defined as a highly automated power system that can self-regulate. Modern artificial intelligence technology has advantages in the application of power grid systems. With the help of artificial intelligence technology, more complex problems can be solved, significantly reducing the uncertainty in the power grid, and maintaining and detecting the operation of the power grid system will be more stable and accurate, improving the safety and adaptability of the entire power grid system [4].

In short, an SG is a combination of modern sensing, communication, and automation technologies that closely matches traditional power systems to form a new, intelligent, modern power network system.

2.2. Core components and principles of photovoltaic PG in SGs

2.2.1. Photovoltaic cell

Photovoltaic cells utilize the photovoltaic effect to convert light energy into electrical energy. The photovoltaic effect is the effect of electric current and electromotive force generated by the internal charge movement of a photovoltaic cell when it receives a signal of light radiation. The equivalent circuit model is shown in Figure 1 [5]

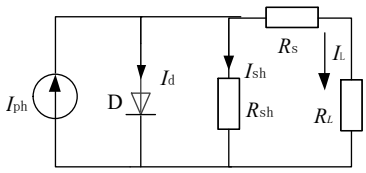

Figure 1. Equivalent circuit model of a photovoltaic cell (original)

DOI: 10.54254/2755-2721/2026.BJ31416

As shown in Figure 1, a photovoltaic cell is mainly composed of three parts: a photocurrent source, a diode, and series and parallel resistors. The photovoltaic current source is the core of the photovoltaic effect. When sunlight shines on the battery, it generates a constant current, which in turn generates a voltage across the PN junction [5]. The diode in Figure 1 represents the PN junction, which determines the unidirectional conductivity and shape of the I-V characteristic curve of the battery. When the photovoltaic cell does not receive sunlight, its function is like a diode. The parallel resistor Rsh and the series resistor Rs, respectively, represent the current path caused by internal losses and the total resistance inside the battery. RL is the circuit load, and the current flowing through RL is naturally also the load current. However, the power of individual photovoltaic cells is very small, so photovoltaic PG systems need to connect a large number of photovoltaic cells in series and parallel to form a photovoltaic array.

2.2.2. Photovoltaic inverter

The photovoltaic PG system of SG needs to be connected to the grid, so the essential component is definitely the photovoltaic inverter. The function of an inverter is to connect the power grid and the photovoltaic array. Photovoltaic cells generate constant direct current, but the power grid and household appliances mainly use alternating current. Therefore, inverters can convert the direct current generated by photovoltaic cells into alternating current of the same frequency and phase as the power grid.

The inverters in SGs are even more outstanding in terms of grid control, maximum power point tracking, and preventing islanding effects. For example, the DC/AC inverter used in grid-connected photovoltaic PG is modeled as shown in Figure 2.

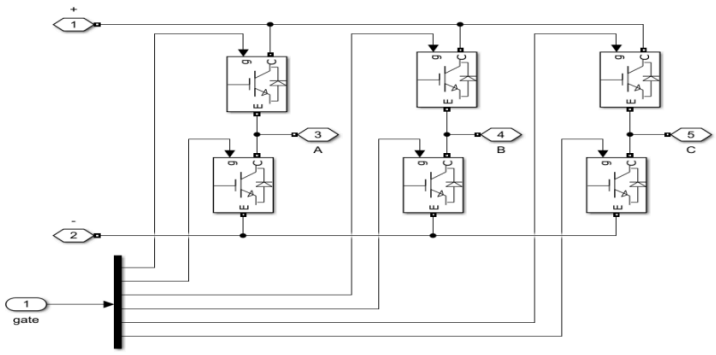

Figure 2. DC/AC converter (original)

The DC/AC inverter can adjust its working state at any time and use it to track the maximum power point, ensuring that the photovoltaic array can output maximum power under any lighting and temperature conditions, thereby ensuring maximum PG revenue. Under normal circumstances, grid-connected photovoltaic PG will prioritize self-use, Secondly, the excess electricity is transmitted to the grid, but when there is insufficient PG, it is replenished from the grid to achieve stability of the entire grid system. However, when there is a malfunction or power outage in the power grid, the photovoltaic system will continue to generate electricity, causing the photovoltaic system to bear the PG pressure of the entire power grid system. This phenomenon is called the islanding effect [6]. By using DC/AC inverters to protect against islanding effects, the inverter will prevent the photovoltaic system from supplying power back to the grid in the event of a power outage.

DOI: 10.54254/2755-2721/2026.BJ31416

2.3. Principles of wind PG and its applications in SGs

The core principle of wind PG is to use wind energy to drive generators and convert mechanical energy into electrical energy. The use of wind PG is very environmentally friendly, clean, and has a large amount of wind energy, making it sustainable.

2.3.1. Basic principles

The principle of wind PG is to use wind power to drive the rotation of windmill blades, to generate electricity for the generator. For example, in Figure 3, the wind turbine blades used for PG have undergone a special aerodynamic design. When the wind blows through the blades, a pressure difference is generated between the front and rear of the blades, which generates power to start rotating the blades [7].

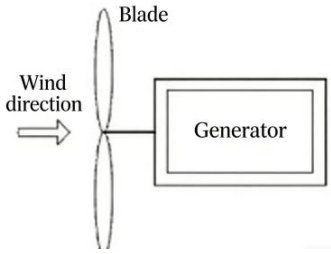

Figure 3. Schematic diagram of wind PG (original)

2.3.2. Grid connection of wind PG in SGs

Wind power grid connection can provide the electricity generated by wind power to the grid side, while being controlled by the grid, achieving controllable wind power and stable energy output. The principles of different wind turbines are different, and the grid connection methods used are also different. There are currently four most commonly used types of wind turbines in China, namely asynchronous wind turbines, doubly fed asynchronous wind turbines, direct drive AC permanent magnet synchronous generators, and high-voltage synchronous generators [8].

Asynchronous wind turbines are characterized by their simple structure, durability, and low cost, which is why most of the units in wind farms in China are asynchronous wind turbines. However, because asynchronous generators cannot generate reactive power and need to continuously draw reactive power from the grid to maintain the magnetic field, in order to improve energy efficiency, many large modern wind turbines gradually choose doubly fed asynchronous generators and permanent magnet direct drive synchronous generators. Double fed asynchronous generator is currently one of the mainstream wind PG technologies in SGs [9]. When grid connection is required, the grid circuit breaker will be closed when the stator voltage is completely synchronized with the grid voltage. At this time, the grid connection is achieved because the voltages on both sides are completely consistent.

Direct drive permanent magnet synchronous generator is one of the mainstream technologies for modern wind PG, especially offshore wind power. Compared with the two types of generators mentioned above, the rotor of the direct drive permanent magnet synchronous generator is made of high-strength permanent magnet material, Therefore, the rotor magnetic field is generated by permanent magnets, which does not require external excitation current and does not consume

DOI: 10.54254/2755-2721/2026.BJ31416

reactive power from the power grid; Brushless and slip ring, high reliability [10]. The simulation principle of the control module in the SG is shown in Figure 4:.

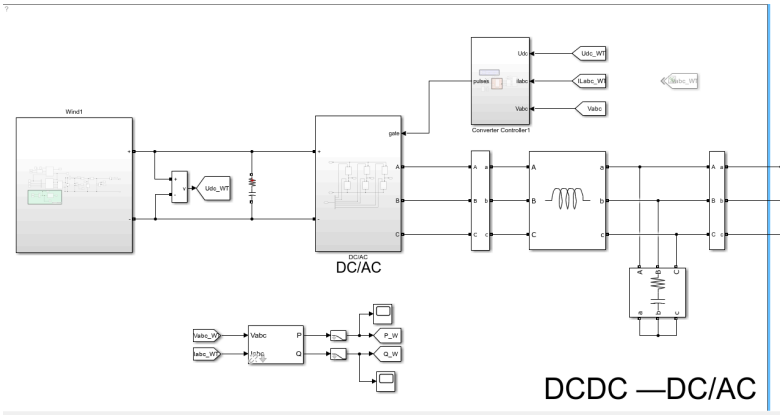

Figure 4. Simulation diagram of the wind turbine control module (original)

From Figure 4, it can be seen that the generator side is independently controlled from the grid side. The generator side detects wind speed and fan speed signals through induction. Control the power switch of the inverter, so that the wind energy absorbed by the wind turbine is converted into AC power of the same frequency and phase as the grid through the generator and DC/AC inverter. The Boost boost chopper circuit is used to provide a stable and high-quality DC input for the subsequent DC/AC inverter, change the equivalent load measured by the generator, and achieve maximum power point tracking. So that the wind turbine can always capture the maximum wind energy [11].

2.4. Principles and applications of electrical ES technology

The power grid system uses clean and renewable energy sources such as wind and solar power for PG, but wind and solar energy have intermittent and fluctuating characteristics, while users' electricity demand is relatively stable and regular. This results in a power imbalance between the PG side and the power consumption side. So ES technology can be used to control power supply and store electrical energy. The ES methods mainly include pumped storage, compressed air storage, flywheel storage, superconducting magnetic storage, supercapacitor storage, battery storage, etc.

Pumped storage is an ancient, mature, and relatively large-capacity large-scale ES technology. The ES capacity of pumped storage power stations is enormous, and they can achieve regulation across hours and days, making them an ideal technology for large-scale peak shaving and valley filling in the power grid [12]. However, this technology relies on special geographical locations, which also results in the disadvantage of high construction costs.

The technology with similar advantages and disadvantages to pumped storage is compressed air ES technology. Compressed air ES is an ES system proposed by gas turbine technology [13]. Compressed air has a large ES capacity and long regulation time, but requires large gas storage rooms, relies on the geographical environment, and the equipment cost of gas storage facilities is high.

Flywheel ES technology is a mechanical ES method. Summary of literature [14]. Flywheel ES has the characteristics of high efficiency, environmental friendliness, and long service life. Flywheel ES can release huge power in a short period of time, with fast response speed and extremely high energy conversion efficiency. However, flywheel ES technology requires the use of various

DOI: 10.54254/2755-2721/2026.BJ31416

expensive materials and technologies, such as high-strength carbon fiber composite materials, so the investment cost is high. Secondly, flywheels are not suitable for long-term ES [15].

Battery ES, also known as chemical ES, is currently one of the widely used and mature forms of ES [16]. Battery ES technology has many advantages in the power system, as it can stabilize system frequency and voltage, regulate reactive power, and power factor. Even batteries can be mixed with supercapacitors to combine the advantages of both technologies and improve the performance of ES devices.

3. SG wind-solar-storage operation optimization

3.1. Multi-energy coordination and complementarity

Multi-energy complementarity is the only way to build a new type of power system and achieve energy transformation in modern times. Wind solar ES complementarity mainly involves adding ES technologies, such as battery storage, pumped storage, etc., based on wind solar energy. A typical case of multi-energy complementarity is the construction of multi-energy complementary island microgrids by Southern Power Grid [17]. In Lei et al. 's study, four potential multi-energy complementary schemes were proposed: wind + storage + diesel, solar + storage + diesel, wind + solar + storage + diesel, and only diesel engine [17]. However, the article also points out that the development of islands should adhere to both development and protection, and combine pollution prevention and ecological restoration. So by utilizing the multi-energy complementarity of wind, solar, and diesel storage, the use of fossil fuels such as diesel can be effectively reduced, while also achieving peak shaving and valley filling effects, and the four energy sources can operate in a coordinated and efficient manner. Southern Power Grid has built corresponding microgrids on various islands to achieve regional interconnection and operation of the large power grid, supplying and supplementing power to each other in different regions, thereby enhancing the ability to resist risks and accidents, improving the safety level and power supply reliability of the power grid. Establish a large power grid area in the South China Sea island group, and interconnect adjacent isolated island microgrids to form a microgrid group, forming a coordination and mutual support mechanism between island power grids. Southern Power Grid proposes to select larger island microgrids as the central power grid, equipped with relatively large capacity controllable power sources and ES devices, Connect multiple adjacent island microgrids to form a radial structure, issue dispatch instructions through the central power grid, and make appropriate adjustments to each small microgrid to maintain power balance and energy balance, ensuring the safe and stable operation of the large power grid system. In short, Southern Power Grid fully utilizes the natural resources of the South China Sea islands, carries out the construction of microgrids on islands, and proposes a multi-energy complementary scheme and radial grid structure for microgrids in the South China Sea island group, which has important promotion significance for the development and development of multi-energy complementary technology.

3.2. SGL storage interaction

SGL storage refers to the transformation of the power system from a passive mode of generating and consuming electricity to an active mode of intelligent interaction between source, grid, load, and storage. The Zhangbei Wind and Solar ES and Transmission Demonstration Project, which was put into operation in China in 2011, utilizes the method of SGL storage. It is the world's largest new energy demonstration power station, integrating wind PG, photovoltaic PG, an ES system, and

DOI: 10.54254/2755-2721/2026.BJ31416

intelligent transmission. Firstly, the output time periods of wind and solar resources in the Zhangbei region are different. The Zhangbei region has strong daylight and strong wind at night, and the wind and solar resources in the region complement each other in terms of time. Secondly, the Zhangbei Wind and Solar ES and Transmission Demonstration Project is currently the world's largest multi-type chemical ES power station [18]. The biggest achievement of this project is to prove that the integration of "SGL storage" is an effective path to solve the problem of high proportion of new energy integration into the power grid. Its core advantage lies in transforming fluctuating and random clean energy into safe, stable, reliable, and sustainable high-quality electricity through systematic innovation and collaboration, achieving a historic leap from "theoretical conception" to "practical benchmark". It not only ensures a Winter Olympics, but also points out the direction of future global energy and power development. Zhangbei Wind and Solar ES and Transmission Demonstration Project, utilizing a Flexible DC Grid, realizes the input and release of various new energy sources such as wind power and photovoltaics on a large scale, controls power flow more flexibly, quickly balances changes in power sources and loads, and turns unstable energy into reliable electricity. During the Winter Olympics, it achieved a 24-hour continuous energy supply to Olympic venues through wind, solar, ES joint scheduling, and intelligent control of flexible DC power grids. Therefore, under the collaboration of source network load storage interaction, the control strategy between wind and solar ES also becomes flexible. By closely coupling and intelligently interacting the three links of energy production, transmission, and storage, a more efficient, clean, and flexible energy system has been ultimately constructed.

3.3. Multi-network convergence and interconnection

Multi-network integration refers to the integration of multiple physical and information networks that were originally planned and operated independently. Through the communication and control technologies of cash, multiple networks are deeply coupled and intelligently coordinated, ultimately forming an efficient, resilient, and green comprehensive energy information ecosystem. Multi network integration technology is not just a simple fusion between various networks, but a highly interconnected system and route of multiple technologies, In addition to realizing multi network integration of power, telecommunications and the Internet through power communication technology, it can also build a complex new system of mutual voice and collaborative interaction between the urban physical world and the network virtual space [19]. The Xiong'an Urban Computing Center has solved the intelligence problem of complex urban systems through this method. Through multi-network integration and data interconnection, a digital twin city with power perception and interconnectivity of all things has been synchronously constructed while building physical cities. It is not only the brain of Xiong'an City, but also a replicable prototype of a smart city operating system for the future, representing a new height and new method of urban digital development [20].

3.4. Proposal of the optimization method

According to the analysis of wind and solar ES operation in the previous text, the high operating costs and difficulty in controlling resource utilization strategies are the main challenges. In recent years, with the continuous development of AI computing and the gradual maturity of artificial intelligence technology, this article attempts to propose a new wind solar ES optimization method. In the future, AI algorithms can be used to deeply integrate AI with physical models. Liu Xin proposes research on all-weather real-time perception of power grid security vulnerabilities based on

DOI: 10.54254/2755-2721/2026.BJ31416

AI technology [21]. It is suggested to incorporate AI technology into ES systems. AI will integrate meteorological and energy models, and can accurately predict future weather conditions from meteorological models. In energy models, AI can predict electricity prices and grid security risks based on physical laws, market rules, and trends. In summary, forming an AI system that can formulate high-yield charging and discharging strategies has achieved the goal of high efficiency and benefits. Moreover, referring to the radiating power grid structure of Southern Power Grid, AI intelligent agents can be integrated into the central microgrid to form a main grid intelligent agent in the future, Through the powerful computing power of AI, the main grid can more sensitively and accurately perceive the real-time status of the power grid, And based on the physical characteristics of power system control, it actively sends reasonable command signals to guide other microgrids to make correct control actions, thereby making the voltage and frequency of the entire power grid system more stable and enhancing the resilience of the power grid.

4. Conclusion

The hybrid operation of wind, solar, and ES in SGs is one of the most important methods in distributed PG. The mixed operation of wind, solar, and ES can integrate wind and solar energy into the power grid, enabling greater growth and higher levels of commercialization of energy generation. At the same time, the isolated operation system of wind and solar microgrids can handle the electricity consumption problems of users in economically underdeveloped and remote areas. Avoiding the difficulty of a long cost recovery cycle caused by a large amount of capital investment in transmission line construction helps to improve the power supply level in remote areas.

After analyzing the concept of SG and explaining the principle of wind and solar ES operation, this paper also points out the shortcomings of intermittent and unstable resources currently faced by wind and solar ES. Propose the three most widely used power grid optimization methods and provide specific cases of their implementation in China. Research has found that the implementation of specific cases, such as the multi energy complementary island microgrid of Southern Power Grid, The operating cost of this method is extremely high, and the signal control strategy of the central network is extremely complex, or the construction of the Xiong'an computing center requires the integration of various information networks, energy networks, and other networks for control. Therefore, this article proposes an optimization method for SGs, which involves introducing artificial intelligence algorithms into the main grid control layer of the power grid. Through the synergistic effect of data-driven and system control, it is expected to achieve a synergistic improvement in overall operational performance. In the future, more attention should be paid to the research on grid optimization, and how to inject artificial intelligence and AI technology into the power system to promote the further development of resource recycling and efficient utilization of electricity.

References

[1] Zhang, P., Yan, L., Gao, Y., et al. (2025). Coordinated optimization control strategy for wind, photovoltaic and storage systems and research progress. Energy and Energy Conservation, (12), 6–8, 124.
[2] Chen, S., Song, S., Li, L., et al. (2009). Review of smart grid technology. Power System Technology, 33(8), 1–7.
[3] Nie, W., & Zhang, X. (2025). Research on the application of power technology in smart grid. Science and Innovation, (22), 221–223.
[4] Xu, H., Xu, Z., & Shi, F. (2025). Application and development of artificial intelligence technology in electrical engineering automation. Paper-making Equipment and Materials, 54(9), 76–78.

DOI: 10.54254/2755-2721/2026.BJ31416

[5] Liu, D., Chen, S., Ma, M., et al. (2011). Review of photovoltaic power generation system models. Power System Technology, 35(8), 47–52.
[6] Zhao, W. (2003). Research on solar photovoltaic grid-connected power generation system (Master's thesis). Hefei University of Technology.
[7] Lin, Z. (2010). Wind power generation technology and its development trends. Electric Power and Electrical Engineering, 30(2), 34–37.
[8] Guo, H. (2021). Research on the automation grid connection operation technology of wind turbines. China High-Tech, (22), 57–58.
[9] Fan, Q. (2021). Research on the stability of wind power grid connection (Master's thesis). Shanxi University.
[10] Zhang, Y. (2024). Research on grid-connection stability of permanent magnet direct drive wind power generation system (Master's thesis). Shenyang University of Technology.
[11] Li, S. (2013). A MPPT control strategy with variable weather parameter and no DC/DC converter for photovoltaic systems. Proceedings of the CSEE, 35(22), 33–42.
[12] Zhang, S., Tang, L., Song, F., et al. (2025). The technological development and application of pumped storage power (Part II). Mass Electricity Consumption, 40(10), 74–75.
[13] Wang, S., Cheng, L., Zhou, L., et al. (2025). Research pattern and development trend of new energy storage technologies. Geomatics and Information Science of Wuhan University, 1–19. https: //doi.org/10.14188/j.1671-8836.2025.0142
[14] Zhou, L., Huang, Y., Guo, K., et al. (2011). Review on energy storage technologies for microgrids. Power System Protection and Control, 39(7), 147–152.
[15] Li, X., & Palazzolo, A. (2022). A review of flywheel energy storage systems: State of the art and opportunities. Journal of Energy Storage, 46, 103576.
[16] McDowall, J. (2000). Conventional battery technologies—Present and future. In Proceedings of the IEEE Power Engineering Society Summer Meeting.
[17] Leijin, Y., Bai, H., Ma, X., et al. (2018). Review and prospect of multi-energy complementary island microgrid in southern power grid. Southern Power Grid Technology, 12(3), 27–34, 73.
[18] Liu, X., & Zhao, Y. (2016). Introduction to the national wind-solar storage and transmission demonstration project and analysis of its typical operating modes. Information & Computer (Theoretical Edition), (4), 148–149.
[19] Zhou, Y., & Liu, C. (2018). The logic and innovation of building a digital twin city in Xiong'an new area. Urban Development Studies, 25(10), 60–67.
[20] Zhu, N., Yuan, X., Liu, Y., et al. (2023). Urban computing centers for the digital age. Building Science, 39(1), 1–6.
[21] Liu, X. (2023). Research on real-time and all-weather monitoring of grid security vulnerabilities based on AI technology. Automation and Instrumentation, (9), 60–63.