Proceedings of CONF-MCEE 2026 Symposium: Geomaterials and Environmental Engineering
DOI: 10.54254/2755-2721/2026.MH31259

Research Progress on MOF-Based Single-Atom Catalysts in Photocatalytic Reactions

Ruoshui Sun

School of Chemical Engineering, Central South University, Changsha, China
3393088921@qq.com

Abstract. This paper reviews the research progress of MOF-SACs in the field of photocatalysis. First, it introduces the fundamental concepts of MOFs (metal-organic frameworks) and SACs (single-atom catalysts) along with the research background of this paper, elucidating their unique structures and properties. Subsequently, it delves into the material structures and characteristics of MOF-based single-atom catalysts. The focus is on analyzing specific catalytic reactions in current research, including photocatalytic CO_2 reduction, water splitting, organic pollutant degradation, and organic synthesis, alongside several specialized material optimization strategies.

Keywords: MOFs, SACs, Photocatalytic, catalytic reactions

1. Concepts and research background

1.1 Overview of Metal-Organic Framework (MOF) materials

Metal-organic frameworks(MOFs) have attracted significant attention as an emerging porous material in materials science [1]. These materials consist of crystalline structures with periodic networks formed through self-assembly of metal ions/metal clusters and organic ligands. There is a plethora of different topological structures of MOFs. Metal ions/metal clusters play the role of nodes and organic ligands are connection bridges that connect to form pore structures of different size and shape. This unique construct gives MOFs a myriad of exceptional properties [2-7]. First, it provides an extremely high specific surface area that offers a large number of active sites that gives MOFs distinct advantages in practicality of gas molecule adsorbing, storage, and catalyzing reactions. As carbon dioxide is a greenhouse gas with a tremendous environmental impact, it has been the focus of research of adsorption characteristics of MOF materials. Materials such as MIL-53(Cr) synthesized by Bourrelly et al. achieve carbon dioxide adsorption capacity of 10.4 mmol/g which is well beyond other materials including molecular sieves [8]. Secondly, the pore size and shape of MOFs can be tuned. By making informed choices of the metal ion and organic ligands the pore structure of an MOF can be designed to incorporate a variety of molecules of different sizes and shapes. Third, MOFs allow for tunable structural parameters. By changing the metal atoms and ligands that comprise the structure, or through functionalization of the organic ligands, MOFs can develop dissimilar chemical properties and can be used to address various applications across fields of use.

© 2026 The Authors. This is an open access article distributed under the terms of the Creative Commons Attribution License 4.0 (https://creativecommons.org/licenses/by/4.0/).

DOI: 10.54254/2755-2721/2026.MH31259

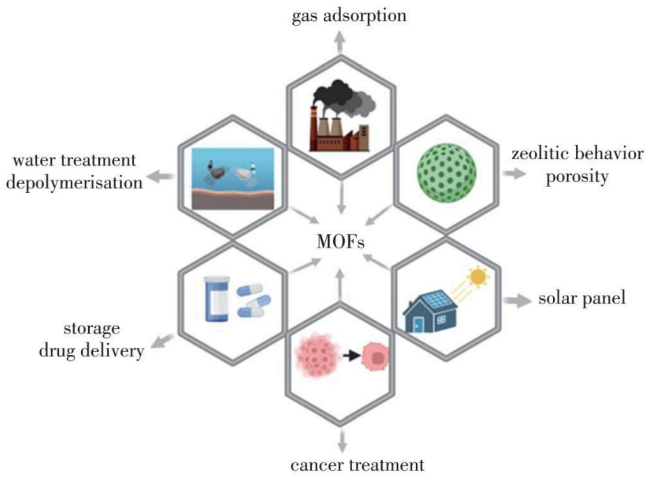

Figure 1. Schematic diagrams of various applications of MOFs

1.2 Overview of Single-Atom Catalysts (SACs)

SACs are a unique class of catalysts in which metals are dispersed in a stable, isolated form as isolated atoms, as their name implies. SACs are highly dispersed as a form of single-atom on the support surface [9-11]. The atomic-level dispersion structure maximizes the use of active metal atoms thereby takingadvantage of each atom as a site participating in catalytic reactions [12-14]. SACs possess a distinct advantage over conventional nanoparticle catalysts by eliminating the loss of active sites associated with metal atom clustering, significantly improving the atom economy of the catalyst. Concerning catalytic behavior, SACs demonstrate outstanding activity and selectivity. The coordination environment surrounding the SAC, as well as the alterations in the distribution of electron cloud, can be finely tuned to optimize performance and achieve extraordinarily high activity for specific reactions [15,16]. Feng et al. performed an interesting study where they implemented Pd atoms in the discrete lattice of copper. The synergy between the Pd and copper resulted in an improved catalytic activity during the ethanol dehydrogenation reaction. This study demonstrated the versatility of single-atom catalysts as they provided configurational hierarchies beyond standalone catalysts. Single-atom catalysts can operate as regulatory components capable of upgrading and optimizing catalytic systems [17].

1.3 Principles and processes of photocatalysis

Photocatalysis as a technology with an incredible future, offers a broad range of applications in a variety of fields including energy conversion and environmental purification [18,19]. The concept relies on the distinct optoelectronic properties of semiconductor materials, whereas MOFs can capture sunlight over a wide range of wavelengths and have significant promise for photocatalytic applications. Regarding the photocatalytic process of MOF materials, it is nearly identical to the light-response principle of traditional semiconductors [4]. When light of sufficient energy hits a semiconductor photocatalyst, the energy of the photons is absorbed by the material [1]. The energy band structure of materials comprises valence bands and conduction bands. The conduction band can be viewed as a layer of free electrons, which electrons can leave during reduction reaction for catalytic action [20,21]. It is important to emphasize that in traditional forms of MOF materials for photocatalysis, electron-hole pairs tend to recombine readily, which is expected given that retaining stable separation in one material is very challenging and will generally lower catalytic efficiency.

DOI: 10.54254/2755-2721/2026.MH31259

Consequently, researchers have proposed MOF-based heterostructures. The introduction of heterojunctions can optimize the band structure, promote electron-hole separation, increase active sites, and consequently enhance photocatalytic efficiency. These heterojunctions include Z-type and S-type heterojunctions [4,22]. Figure 2 illustrates three separation configurations, with Type II being the most ideal form. Here, electrons and hole pairs are distributed across two distinct materials to prevent recombination that occurs with single-material distribution, thereby ensuring maximum photocatalytic efficiency [23-26].

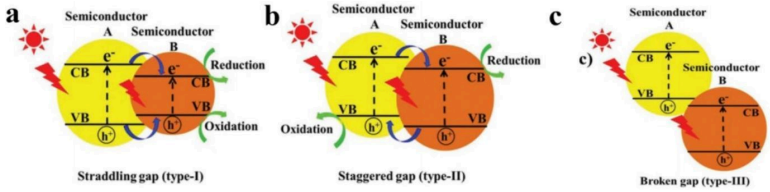

Figure 2. Schematic illustration of three distinct types of electron-hole pair separation in conventional light-responsive heterojunction photocatalysts [27]

2. MOF-based single-atom catalysts

The structure of the aforementioned MOF materials exhibits high designability and diversity, enabling the construction of MOFs with various topological structures. Consequently, MOFs possess large specific surface areas and rich pore structures. First, their inherently stable structural form facilitates the maintenance of single-atom dispersion in catalysts: individual atoms are dispersed within the metal-organic ligand framework to form "atomic cages." Second, the variable framework dimensions of MOFs provide customized supports for different single-atom catalysts [28]. In electronic structure perspective, the isolated electron states of individual atoms and charge transfer with MOF carriers endow the catalyst with unique electronic properties. This facilitates the separation of photo-generated electrons and holes, reducing their recombination probability and thereby enhancing the quantum efficiency of photocatalytic reactions [29].In their study on nickel-dispersed MOF materials, Ma et al. demonstrated that the adjacent -O/OHx groups of Zr^{6-}-oxo in MOFs can provide lone pair electrons for anchoring single atoms while maintaining charge balance. Furthermore, the study comparatively analyzed the performance of different X groups in Ni1−X/MOF systems (where Ni1−X includes Ni1−S, Ni1−O, Ni1−Sox; ox denotes oxidation state). Results confirmed that hydrogen evolution catalysis efficiency using S atoms significantly outperformed other X groups. This advantage stems from the reduced oxidation state of S-doped Ni, which more effectively lowers the activation energy for proton reactions[30]. This holds significant implications for MOF-SAC research, as it marks the first successful construction of a highly efficient MOF-based single-atom catalyst that integrates micro-ligand regulation with a linked photosensitizer unit to optimize catalytic efficiency [31].

3. Application of MOF-based single-atom catalysts in photocatalysis

3.1. Photocatalytic CO_2 reduction

With global energy demands rising and environmental pressures increasing, there has been an increased interest in the photocatalytic reduction of carbon dioxide (CO_2) as a way to address both issues at the same time [17]. Photocatalytic reduction of carbon dioxide attempts to harness solar energy to convert CO_2 into useful hydrocarbons and fuels, including methane, methanol, and carbon

DOI: 10.54254/2755-2721/2026.MH31259

monoxide. This strategy not only contributes to alleviating the greenhouse effect but also facilitates the cyclic use of carbon resources, thereby providing new avenues for sustainable energy development [32].

Single-atom catalysts based on metal-organic frameworks (MOFs) have become a focus area of research, and for good reason: their unique combination of structural and property advantages. There is a wide variety of literature to support the fact that different metal centers, supported on a MOF matrix, exhibit very different catalytic activity and product selectivity. For example, the transition metals iron, cobalt, and nickel supported as single atoms on MOF supports are very effective in catalyzing the reduction of carbon dioxide into specific target products [28]. In one previous study, Ye et al. reported an effective CO_2 reduction system by combining single Co atoms with porphyrin units, which produced carbon monoxide and methane. The reported CH_4 production rate of 36.67 $\mu mol \cdot g^{-1} \cdot h^{-1}$ demonstrates the promise of recycling CO_2 from our energy consumption. There are other similar approaches being tested, such as a bimetallic Cu-Ni MOF-based catalyst designed by Zhong et al. [33] In studies of catalytic hydrogen generation, the function of single-atom catalysts has been deemed crucial not only for the mediation of interactions with substrates but also for the ability of metal atoms themselves to regulate visible-light capture and improve the separation of electron-hole pairs via mechanisms like band overlap. In this way, a methane selectivity of 97.5% was achieved in CO_2 reduction reactions. Following this work, Zhang et. al. used a cobalt-nickel bimetallic approach by building isostructural Co_xNi_γ-MOFs (where x and y indicate the atomic ratios of the Co and Ni, respectively) and substantially improved CO selectivity. The system had a CO desorption rate of 1160 $\mu mol \cdot g^{-1} \cdot h^{-1}$ and selectivity of 94.6%. Besides the conventional energy applications, which are critical, the products of CO_2 reduction can also be precursors to many organic compounds [34]. Mahmoud et al. converted carbon dioxide to formate using a Zr-MOF complexed with bis(4′-(4-carboxyphenyl)-tripyridinyl)ruthenium(II) [35]. In addition to studies focusing on product formation and selectivity, researchers have studied combining MOF-based single-atom catalysts (MOF-SACs) with other photocatalytic materials to enhance overall catalytic activity. At its core, photocatalysis emerged from semiconductor science, and the deliberate incorporation of suitable semiconductors and MOF-SACs represents a legitimate way to material optimization. For instance, Zhang et al. studied g-C_3N_4 coupled with a Co-MOF, accomplishing transfer of single atom sites to the semiconductor surface while the MOF framework would keep the sites from thermally aggregating. The resulting composite served as an effective, inexpensive catalyst, achieving rates of 464.1 $\mu mol \cdot g^{-1} \cdot h^{-1}$ [36].

One interesting aspect of this work involves the synthesis of MOF materials, which are complex and well-defined microporous structures that require careful mixing of reaction components and controlled synthetic conditions. These considerations rely on the understanding of reaction mechanism, the final structural details, the initial ligand design as well as the synthetic strategy itself that is heavily weighted on density functional theory (DFT) computations. This highlights the role of theoretical modeling for guiding the synthesis of these materials. By optimizing through computational methods, both the predicted structures and experimentally observable features can be improved for scientifically rational development of materials, especially with respect to advanced MOFs.

3.2. Photocatalytic hydrolysis

Hydrogen energy is viewed as a key pathway for decarbonizing the global energy system, due to its suitability in multiple sectors of energy use, such as transportation. Photocatalytic water splitting as a means of producing clean, hydrogen energy is an attractive and sustainable method of producing

DOI: 10.54254/2755-2721/2026.MH31259

hydrogen [19,37].Fang and colleagues have made the ground-breaking discovery of utilizing a MOF as a support for single-atom catalysts (SACs) in photocatalytic water splitting for hydrogen production. They incorporated isolated Pt(II) single atoms into a porphyrin-based Al-TCPP MOF ($(AlOH)_2H_2TCPP$; TCPP=tetrakis(4-carboxyphenyl)porphyrin). The hydrogen evolution rate for this system was reported to be 129 $\mu mol \cdot g^{-1} \cdot h^{-1}$ [38]. The potential to expand the variety of metal catalysts in single-atom research is a promising avenue for increasing the scope of catalytic systems. For instance, Ma et al. introduced Cu into MIL-125 by slightly substituting Ti atoms with Cu during the hydrothermal synthesis of the MOF. Heterogeneous Cu-immobilized MIL-125 also showed efficient photocatalytic hydrogen evolution performance [39].

Recent developments in hydrogen evolving catalysis with MOF-SAC catalysts has yielded significantly improved reaction rates. For example, Liu et al. created an ultrathin, two-dimensional porphyrin-based MOF by combining two top performers, PdTCPP and Ti-oxo clusters. The PdTCPP part provided strong absorption of visible light, and coordinated palladium sites were utilized to efficiently catalyze hydrogen evolution at a rate of 1.32 $mmol \cdot g^{-1} \cdot h^{-1}$ [40]. These results further highlight that the light-harvesting properties of MOF-SACs can be progressively modified via rational structural design. The band structure and light-harvesting properties of MOF materials can be systematically modified via the rational choice of metal nodes, organic linkers, and topological framework designs, which can lead to expanded spectral absorption and increased overall utilization of light. In this case, the previously described two-dimensional framework results in efficient charge separation while the incorporation of porphyrin units notably increases visible light absorption.

3.3. Photocatalytic degradation of organic pollutants

The rapid pace of industrialization has resulted in increasingly serious environmental pollution by organic contaminants. Conventional treatment technologies have multiple drawbacks such as high operating costs and the potential for secondary pollution. Therefore, it is necessary to develop cost-effective and environmentally benign technologies for the degradation of organic pollutants. The aim in treating nitrogen oxides, as an example of a significant air pollution category, is often to oxidize them into nitrate ions and avoid the potentially toxic production of nitrogen dioxide (NO_2) [41]. Chen et al. developed a system for deep oxidation of NO which integrates a plasma discharge system with MOF-SACs. They incorporated Ru into the Zr sites of NH_2-UiO-66 and modified it with MnO_2 and leveraged the side products generated during plasma byproducts including O_3 and N_2O. The end result was a highly selective catalyst for deep oxidation of NO.The study unveiled a “pseudophotocatalysis” mechanism, whereby electrons and holes created in the plasma—not by light illumination—act as-catalytic reactive species in a similar way to conventional, light-induced photocatalysis. This approach allows for prolonged low energy input throughout, and expands the possible use of hybrid catalytic systems in practice [42]. In more experimental studies, MOF-supported single-atomic catalysts have effectively degraded a wide range of organic pollutants.

DOI: 10.54254/2755-2721/2026.MH31259

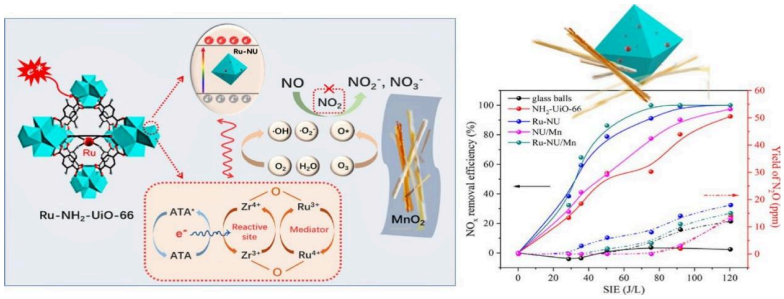

Figure 3. Schematic diagram of the proposed mechanism [42]

However, the photocatalytic performance of MOF-supported single-atom catalysts is hindered by two critical hurdles: rapid recombination of photogenerated charge carriers and limited stability during cycling.

3.4 Photocatalytic organic synthesis

In the realm of photocatalytic organic synthesis that involves numerous reactants and target products, the distinct advantages of MOF-based semiconductor catalytic systems arise from their structural versatility and fully tunable designs [21]. Using first-principles calculations, Wang et al. demonstrated that Fe/Ti-BPDC electrodes can significantly facilitate the conversion of CO_2 to HCOOH. The computational study provided a number of acceptable reaction pathways, suggesting a mechanistic basis for the design of related catalytic materials [43]. Separately, Wang and co-workers synthesized an overall catalytic system by anchoring single-atom Cu sites on UiO-66-NH_2 to affect the conversion of CO_2 into methanol and ethanol. The study showed that Cu single atoms promote the formation of key intermediates, CO* and CHO*, that enable the complete overall conversion of CO_2 to methanol and ethanol via hydrogenation [44]. This provides a mild, effective route for converting CO_2 into fine chemicals. Moreover, MOF-supported single-atom catalysts can also function as selective hydrogenation agents of functional groups such as alkenes and alkynes, which could help with novel methods for future organic transformations.

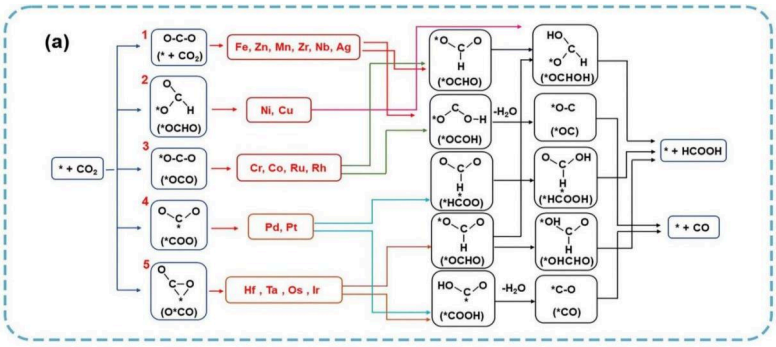

Figure 4. Adsorption modes of CO_2 on coord-M/Ti-BPDC and potential reaction pathways [43]

Although MOF-SACs exhibit significant promise for use in organic synthesis, the present efforts related to the design of their materials and their use in complicated synthetic transformations are limited in scope. Further research in this area is likely to make MOF-SACs powerful agents in the synthesis of fine chemicals (including pharmaceuticals, etc.) and other valuable products.

DOI: 10.54254/2755-2721/2026.MH31259

4. Conclusion

To summarize, MOF-SACs hold considerable promise for photocatalytic organic synthesis. As the understanding of their structure–activity relationships develops and synthetic approaches improve, it is projected that these materials will provide entirely new approaches to enable greener and more sustainable methods in synthetic chemistry. There has been substantial progress in research of MOF-SACs in photocatalysis. From a structural aspect, the porous frameworks of MOFs confer an abundance of anchoring sites for single atoms, also affording tunable microenvironments, which can affect the electronic states and catalytic behaviors of the metal centers. Practically, MOF-SACs have performed impressively in a variety of photocatalytic reactions. However, research on MOF-SAC photocatalysis generally focuses on optimization of individual features, as opposed to understanding the overall catalytic robustness of the system under realistic conditions. Another limitation of research efforts evaluating photocatalytic efficiency in MOF-SACs to date has been the continued use of the simplified DFT models to describe complex reaction mechanisms that limit the interpretation of reliable guidance for further optimization of the overall catalyst.

In the future, more systems-based efforts will need to be planned. Among the challenges faced in MOF-SACs is that catalytic efficiencies are still lower than what is generally required for use with good or mediocre outcomes; the active sites will undergo changes during long periods of operation; and there is little knowledge of dynamic changes and any possible deactivation pathways, which needs to be resolved. These challenges will need to be overcome to propel MOF-SACs to be used in real-world applications.

References

[1] Li Xinyang. Study on Catalytic Hydrogen Evolution Performance and Mechanism of Zirconium-Based MOF/g-C_3N_4 Photocatalysts [D]. Jilin: Jilin University, 2023.
[2] An Y, Liu Y and An P et al. NiII coordination to an Al-based metal-organic framework made from 2-aminoterephthalate for photocatalytic overall water splitting. Angew Chem Int Ed 2017; 56: 3036–40.
[3] YangSZ, Pattengale BandKovriginELetal.Photoactivezeoliticimidazolateframework as intrinsic heterogeneous catalysts for light-driven hydrogen gen eration. ACS Energy Lett 2017; 2: 75–80.
[4] Fu Y, Sun D and Chen Y et al. An amine-functionalized titanium metal-organic framework photocatalystwithvisible-light-inducedactivityforCO2reduction.AngewChemIntEd2012; 51: 3364–7.
[5] Xu HQ, Hu J and Wang D et al. Visible-light photoreduction of CO2 in a metal organic framework: boostingelectron holeseparationviaelectrontrapstates.JAmChemSoc2015; 137: 13440–3.
[6] ZhangH, WeiJandDongJetal.Efficientvisible-light-drivencarbondioxidereduction by a single-atom implanted metal-organic framework. Angew Chem Int Ed 2016; 55: 14310–4.
[7] Wang Y, Huang NY and Shen JQ et al. Hydroxide ligands cooperate with cat alytic centers inmetal-organic frameworks forefficient photocatalytic CO2reduction.JAmChemSoc2018; 140: 38–41. 4.
[8] Sandrine Bourrelly, Philip L. Llewellyn, Christian Serre, et al. Different Adsorption Behaviors of Methane and Carbon Dioxide in the Isotypic Nanoporous Metal Terephthalates MIL-53 and MIL-47. [J]. Journal of the American Chemical Society, 2005, 127(39): 13519-13521.
[9] Li Jianfeng, Zhang Tianyu, Zhao Rui. First-Principles Study on Boron Doping-Enhanced Performance of g-C_3N_4-Based Single-Atom Catalysts [J]. Acta Physica Sinica, 2023, 40(4): 59-64. DOI: 10.19855/j.1000-0364.2023.041009.
[10] Lin, D. Preparation of Cobalt-Based Single-Atom Nanoenzymes and Their Application in Colorimetric Analysis [D]. Jinan University, Shandong, 2024.
[11] Chai Yuchao, Han Xue, Li Weiyao, et al. Control of zeolite pore interior for chemoselective alkyne/olefin separations [J]. Science, 2020, 368(6494): 1002-1006.
[12] Luo Bingtiao, Zhao Pengjie, Zhang Wenwen, et al. Research Progress and Hotspot Analysis of Carbon-Based Single-Atom Catalysts Based on CiteSpace [J]. Journal of Beijing University of Chemical Technology (Natural Science Edition), 2024, 51(4): 1-12. DOI: 10.13543/j.bhxbzr.2024.04.001.

DOI: 10.54254/2755-2721/2026.MH31259

[13] Liu, Fangning. Design, Synthesis, and Application of Iron-Based and Cobalt-Based Single-Atom Nanoenzymes in Biosensing [D]. Jinan University, Shandong, 2024.
[14] Gu Yan. Study on Graphite-like Carbon Nitride-Based Mono-/Diatomic Photocatalysts for Degrading Organic Pollutants [D]. Zhejiang: Zhejiang University of Science and Technology, 2023.
[15] Yu, Xuelai. Synthesis of Ruthenium-Based Single Atoms and Investigation of Their Basic Hydroxylation Properties [D]. Jilin: Jilin University, 2024.
[16] Xu Zhenyang. Study on the Performance of Cobalt-Based Single-Atom Catalysts Activated by Peroxymonosulfate in Degrading Bisphenol A in Water [D]. North China Electric Power University, North China Electric Power University (Beijing), 2023.
[17] Wang Fenfen. Study on Microenvironment Regulation of Active Sites and Oxygen Reduction Performance of Fe-Based Single-Atom Catalysts [D]. Zhengzhou University, Henan: 2024.
[18] Chen Tong, Liu Lizhen, Hu Cheng, et al. Recent Advances in Bi_2WO_6-Based Photocatalysts for Environmental and Energy Applications [J]. Journal of Catalysis, 2021, 42(9): 1413-1438.
[19] ZhouT, DuYandBorgnaAetal.Post-synthesismodificationofametal-organic framework to construct a bifunctional photocatalyst for hydrogen production. Energy Environ Sci 2013; 6: 3229–34.
[20] Du Ruicheng, Li Yan, Wang Ting, et al. Advances in Modification of Nanoscale TiO_2 Photocatalysts [J]. Chinese Chemical Letters (Print Edition), 2023, 86(10): 1172-1180.
[21] Gao Chun, Zhang Songtao, Pang Huan. Metal-Organic Framework Composites [J]. Acta Chimica Sinica, 2025, 83(08): 962-980. DOI: CNKI: SUN: HXXB.0.2025-08-016.
[22] Low J X, Yu J G, Jaroniec M, et al. Heterojunction photocatalysts [J]. Advanced Materials, 2017, 29 (20): 1601694.
[23] Qin Yu, Bai Anjiang, Cai Lu, et al. Research Progress and Applications of BiOCl-Based Heterojunction Photocatalysts [J]. Chemical Bulletin of China (Print Edition), 2024, 87(12): 1420-1427.
[24] He Kelin, Shen Rongchen, Hao Lei, et al. Research Progress on Nanoscale SiC-Based Photocatalysts [J]. Acta Physico-Chimica Sinica, 2022, 38(11): 21-44. DOI: 10.3866/PKU.WHXB202201021.
[25] Xu Dan, Yu Cailian, Peng Xianlong, et al. Progress in the Preparation and Application of Bismuth Molybdate Photocatalysts [J]. Fine Chemical Industry, 2024, 41(10): 2131-2142. DOI: 10.13550/j.jxhg.20230808.
[26] Huang Shiyuan, Wang Zhenyu, Li Sheng, et al. Research Progress on Modification of Bismuth Ferrite Photocatalysts [J]. Fine Chemical Industry, 2021, 38(1): 17-22.DOI: 10.13550/j.jxhg.20200451.
[27] Wu J W, Xie Q J, Zhang C L, et al. Spin-polarization-enhanced photocatalytic performance of ZnFe1.2Co0.8O4/BiVO4 S-type heterojunction for the degradation of tetracycline [J]. Journal of Physical Chemistry, 2025, 41 (05): 120-129.
[28] Pan Xia, Chaohai Wang, Qiang He, et al. MOF-derived single-atom catalysts: The next frontier in advanced oxidation for water treatment [J]. Chemical Engineering Journal, 2023, 452(3): 139446.
[29] Feng, L., Bai, X. Y., Pang, J. F., et al. Single-atom Pd-promoted Cu catalyst for ethanol dehydrogenation. Acta Physico-Chimica Sinica, 2025, 41(09): 105-116. DOI: CNKI: SUN: WLHX.0.2025-09-009.
[30] Xing Ma, Hang Liu, Weijie Yang, et al. Modulating Coordination Environment of Single-Atom Catalysts and Their Proximity to Photosensitive Units for Boosting MOF Photocatalysis [J]. Journal of the American Chemical Society, 2021, 143(31): 12220-12229.
[31] Siyi Maab, Weigao Hana, Weiliang Hana, et al. Recent advances and future perspectives in MOF-derived single-atom catalysts and their application: a review [J]. Journal of Materials Chemistry A, 2023, 11(7): 3315-3363.
[32] Hu Chenghong. Design of MOF-Derived Single-Atom Catalysts and Their Performance in the Electrochemical Reduction of CO_2. [Doctoral Dissertation]. South China University of Technology, 2024. DOI: 10.27151/d.cnki.ghnlu.2024.000271.
[33] Zhao Sisi, Wang Xinyu, Zhao Jingwei et al. Research Progress on Metal-Organic Framework Photocatalytic Reduction of CO_2 to C1 Products [J]. Science China (Chemistry), 2025, 55(2): 319-344.
[34] Jihong Zhang, Yuchen Wang, Hongjuan Wang et al. Enhancing photocatalytic performance of metal-organic frameworks for CO2 reduction by a bimetallic strategy [J]. Chinese Chemical Letters, 2022, 33(4): 2065-2068.
[35] Mahmoud Elcheikh Mahmoud, Hassib Audi, Abdeljalil Assoud, et al. Metal-Organic Framework Photocatalyst Incorporating Bis(4'-(4-carboxyphenyl)-terpyridine)ruthenium(II) for Visible-Light-Driven Carbon Dioxide Reduction. [J]. Journal of the American Chemical Society, 2019, 141(17): 7115-7121
[36] Zhang, Jihong, Yang, et al. Metal-organic layers as a platform for developing single-atom catalysts for photochemical CO2 reduction(Article) [J]. Nano Energy, 2021, 80: 105542.
[37] Kim D, Whang DR and Park SY. Self-healing of molecular catalyst and photo sensitizer on metal-organic framework: robust molecular system for photocat alytic H2 evolution from water. J Am Chem Soc 2016; 138: 8698–701.

DOI: 10.54254/2755-2721/2026.MH31259

[38] X. Fang , Q. Shang , Y. Wang , L. Jiao , T. Yao , Y. Li , Q. Zhang , Y. Luo and H. L. Jiang , Adv. Mater., 2018, 30 , 1705112
[39] Yuxiang Ma, Yumin Zhang, Yiwen Ma, et al. In situ Cu single atoms anchoring on MOF-derived porous TiO2 for the efficient separation of photon-generated carriers and photocatalytic H2 evolution [J]. Nanoscale, 2022, 14(42): 15889-15896.
[40] Xingyan Liu, Chaogang Jia, Guangmei Jiang et al . Single-atom Pd anchored in the porphyrin-center of ultrathin 2D-MOFs as the active center to enhance photocatalytic hydrogen-evolution and NO-removal [J]. Chinese Chemical Letters, 2024, 35(9): 364-368.
[41] Sungjemtula Imchen, Amrit Puzari. Metal–Organic Framework (MOF)-based Single Atom Catalysts (SACs) for Photocatalytic Energy Conversion [J]. ChemistrySelect, 2024, 9(39): e202403516.
[42] Si Chen, Yi Zhou, Jieyuan Li, et al. Single-Atom Ru-Implanted Metal–Organic Framework/MnO2 for the Highly Selective Oxidation of NOx by Plasma Activation [J]. ACS Catalysis, 2020, 10(17): 10185-10196.
[43] Wang, Shuang, Nie, et al. Computational Design of Single-atom Modified Ti-MOFs for Photocatalytic CO2 Reduction to C1 Chemicals [J]. CHEMSUSCHEM, 2024, 17(8): e202301619.
[44] Gang Wang, Chun-Ting He, Rong Huang, et al. Photoinduction of Cu Single Atoms Decorated on UiO-66-NH 2 for Enhanced Photocatalytic Reduction of CO 2 to Liquid Fuels [J]. Journal of the American Chemical Society, 2020, 142(45): 19339-19345.