Proceedings of CONF-MCEE 2026 Symposium: Advances in Sustainable Aviation and Aerospace Vehicle Automation
DOI: 10.54254/2755-2721/2026.KA29725

An Economic Dispatch Strategy for V2G-enabled Microgrid Considering Battery Degradation Cost

Yifan Lu

Insitute of Smart City and Intelligent Transportation, Southwest Jiaotong University, Chengdu, China
2023116763@my.swjtu.edu.cn

Abstract. Nowadays, with the increasing large-scale integration of renewable energy into power grids, Vehicle-to Grid (V2G) technology can play a greater role in maintaining system stability and handling emergencies. However, excessive charging/discharging for electric vehicles (EVs) may significantly reduce the battery lifespan, which has become a main obstacle to user participation. To solve the problem, this paper proposes an economic dispatch strategy for microgrid that considering the cost of battery degradation. Firstly, in order to precisely quantify the cost of battery degradation, this paper builds a mathematical model of battery degradation with Depth of Discharge (DoD) and cycle life data. Then, the cost is incorporated into the dispatch model to minimize the total operational costs, which encompass electricity purchase, degradation, and load curtailment penalties. Simulation results indicate that the proposed strategy successfully protects the economic interests of EV owners, thereby increasing their willingness to participate, and at the same time, reducing the overall system operating costs. This study provides a new approach for V2G in microgrid dispatch and promotes V2G's commercial application.

Keywords: V2G, Microgrids, Battery degradation costs, Economic dispatch

1. Introduction

With the increasing severity of environmental issues, developing distributed microgrids integrated with a high proportion of renewable energy will become a key task in building the future power system [1, 2]. However, the intermittency of renewable energy will pose significant challenges to the operation of distributed microgrids, and flexible distributed energy storage resources can address this issue by power balancing and providing frequency support [3]. Meanwhile, the large-scale popularization of electric vehicles (EVs) has brought a new possibility: a group of dispatchable mobile energy storage units. These units can perform functions such as frequency regulation and peak shaving and valley filling; therefore, Vehicle-to-Grid (V2G) technology shows enormous potential in future power grid dispatch [4].

Despite the promising potential of V2G technology, a major obstacle hindering its large-scale commercialization remains: namely, the degradation of EV battery lifespan caused by participation in V2G activities [5]. If users participate in V2G blindly and subject the battery to frequent and improper charge-discharge cycles, it will drastically accelerate battery capacity fading and shorten

© 2025 The Authors. This is an open access article distributed under the terms of the Creative Commons Attribution License 4.0 (https://creativecommons.org/licenses/by/4.0/).

DOI: 10.54254/2755-2721/2026.KA29725

its service life. Therefore, scientifically quantifying the impact of V2G operations on the State of Health (SOH) of batteries and incorporating degradation costs into the consideration of dispatch strategies may provide a new approach to solving the development challenges of V2G [6].

To address the gaps in existing research, this paper aims to develop a V2G dispatch strategy that accurately quantifies and accounts for battery degradation costs. Based on publicly available Tesla battery capacity fading data, this study scientifically develops a battery lifespan model that considers depth of discharge (DoD) and cycle count by applying the Rainflow counting method and Ah-throughput theory [7]. This model is used to quantify the degradation cost caused by V2G operations. Subsequently, this degradation cost and microgrid operation costs are jointly incorporated into a unified optimization objective function, thereby minimizing the total economic cost of the entire V2G system. When using this approach, user concerns regarding battery wear and tear can be greatly mitigated, and their willingness to participate in V2G programs can also be improved [8].

2. Mathematical modeling

2.1. battery degradation cost model

Based on the cycle life data of Tesla Powerwall+ batteries, this subsection builds a battery degradation cost model. The aim is to quantitatively assess the economic loss caused by each kilowatt-hour of discharged energy during V2G actions. The battery cycle life test in this paper conducts full charge-discharge cycles within a set DoD range: after charging to the upper limit voltage, it switches to the constant-voltage trickle charging mode; when discharging to the lower limit voltage, the test stops. Both the cycle range and termination conditions are strictly defined by voltage thresholds. The test environment temperature is kept constant at 25 ℃, and the charge-discharge current is fixed at 0.5C to balance test efficiency and the stress on the battery. The entire test process is carried out in continuous cycles with no prolonged idle periods, until the battery's discharge capacity fades to 80% of its initial rated capacity—at this point, the battery is determined to have reached its end-of-life (EOL). Table 1 presents the finally measured battery cycle life data.

Table 1. DoD and cycle life data

DoD	N_f	descr
100%	About 3,650	Official warranty
90%	5,000 - 6,000	
80%	7,000 - 8,000	Optimal practice range
70%	7,000 - 9,000	
50%	10,000 - 14,000	the longest lifespan
100%	About 3,650	Official warranty

Next, based on the semi-empirical model of the Rainflow counting method and total throughput theory, Matlab is used to fit the data into the empirical formula $N_f = a \times (\mathrm{DoD})^b$,yielding the corresponding formula.

$$N_f = 4407.2700 * (\mathrm{DoD})^{(-1.5689)} \quad (1)$$

DOI: 10.54254/2755-2721/2026.KA29725

The fitted curve against the experimental data points is visualized in figure 1.

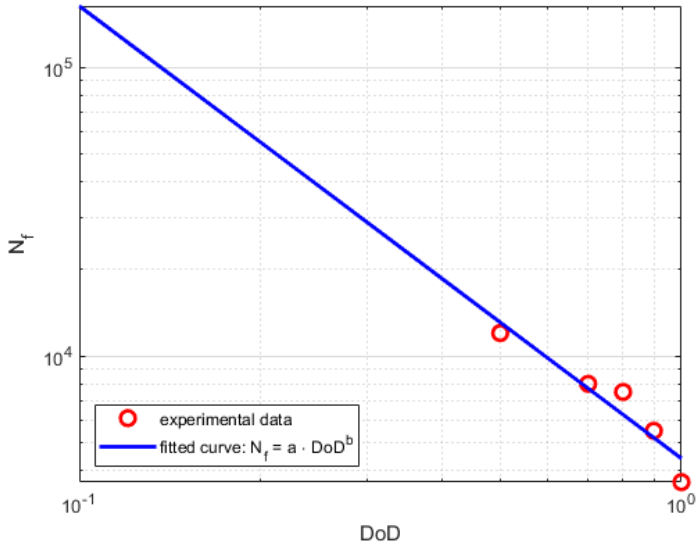

Figure 1. Fitted DoD and cycle life data of Tesla Powerwall+

2.2. Microgrid system model

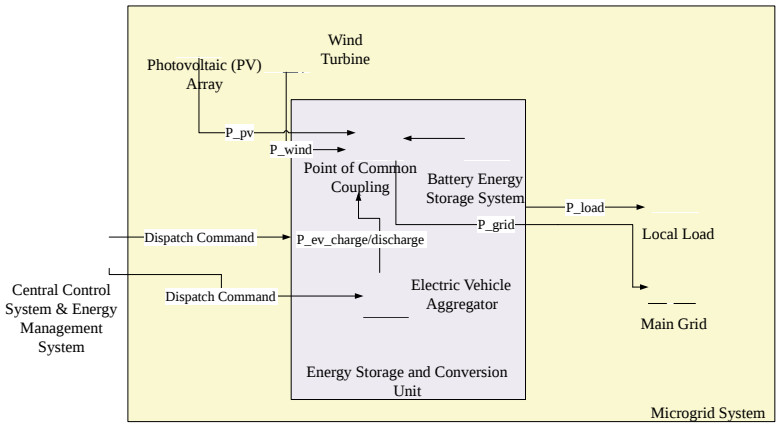

Figure 2. Microgrid system model

Figure 2 presents the structure diagram of the microgrid system constructed in this study, which is intended to intuitively show the core architecture of "source-grid-load-storage" coordinated operation, with its design strictly adhering to the principles of clarity, accuracy, and correspondence. Among them, the physical component layer clearly divides functional modules including distributed generation units (comprising photovoltaic arrays and wind turbines), hybrid energy storage units (comprising battery systems and EV aggregators), local loads, and grid-connection interfaces (Point of Common Coupling); the central control system (Energy Management System is responsible for realizing information aggregation and decision-making dispatch of each module.

The energy flow paths are clearly marked with solid arrows, fully depicting the physical process: after power generation by new energy sources, power is supplied to local loads via the PCC or exchanged with the main grid. In contrast, the information interaction paths are systematically presented with dashed arrows, which not only include the process of the EMS receiving wind-PV

DOI: 10.54254/2755-2721/2026.KA29725

generation/load forecasting data and monitoring system operating status, but also cover the link of it issuing optimized dispatch commands to energy storage units and EV clusters, forming a complete two-way closed loop.

To achieve the closely connection with the mathematical model, in the figure, all decision variable symbols are labeled with corresponding key power channels, enabling the objective functions and constraints in the optimization model to accurately reflect the system's physical topology. The entire figure is structured through a hierarchical layout and standardized symbols, combined with engineering rigor and visual intuition, providing a solid foundation for understanding the system's operation and control strategies.

2.3. Objective function

According to information obtained from Tesla's official website, the price of a 13.5 kWh Tesla Powerwall+ battery is approximately 60,000 yuan. In this study, the DOD_{avg} is set at 75%, and the corresponding N_f of the battery is calculated as 6,921 cycles using the fitting formula in (1). Therefore, dividing the total cost of the battery by its cycle life gives a cost per cycle of 8.67 yuan. Further, combined with the electricity output of 10.1 kWh during one cycle at the average DoD, the degradation cost is calculated to be 0.8562. That is, for every 1 kWh of electricity discharged by an EV, the resulting battery degradation cost is 0.8562 yuan, denoted as β (yuan/kWh).

$$\beta = \frac{cost}{N_f \cdot Q \cdot DoD_{avg}} \tag{2}$$

The objective of the economic dispatch is to minimize the total operating cost of the microgrid over the scheduling horizon T. The total cost $cost_{total}$ comprises three components: the cost of interaction with the main grid, the battery degradation cost of participating EVs, and the penalty cost for load curtailment. Its mathematical expression is as follows:

$$cost_{total} = min \sum_{t=1}^{T} \left[C_{buy}(t) \cdot P_{buy}^{grid}\left(t\right) - C_{sell}(t) \cdot P_{grid}^{sell}\left(t\right) \right] \cdot \triangle t + \beta \cdot \sum_{t=1}^{T} \sum_{n=1}^{N_{ev}} P_{ev,n}^{discharge}(t) \cdot \triangle t + Q_{cut} \tag{3}$$

Here, the first part of the formula, $\sum_{t=1}^{T} \left[C_{buy}(t) \cdot P_{buy}^{grid}\left(t\right) - C_{sell}(t) \cdot P_{grid}^{sell}\left(t\right) \right] \cdot \triangle t$, corresponds to the grid interaction cost. It involves $P_{buy}^{grid}\left(t\right)$ and $P_{grid}^{sell}\left(t\right)$, which represent the power purchased by the microgrid from the main grid and the power sold by the microgrid to the main grid in time period , respectively (unit: kW); these two are mutually exclusive decision variables, meaning only one of them can take a value greater than 0 at the same time. $C_{buy}(t)$ and $C_{sell}(t)$ denote the electricity purchase price and electricity sales price in time period, respectively (unit: CNY/kWh), while Δt is the dispatch time interval (unit: h) and T is the total number of time periods in the dispatch cycle. This part calculates and sums up the electricity purchase and sales costs for each time period throughout the entire cycle to obtain the total grid interaction cost. The second part of the formula, $\beta \cdot \sum_{t=1}^{T} \sum_{n=1}^{N_{ev}} P_{ev,n}^{discharge}\left(t\right) \cdot \triangle t$, corresponds to the battery degradation cost. Among the parameters here, β is the battery degradation cost coefficient (unit: CNY/kWh), whose value is calculated based on the battery degradation model established in the previous section; $P_{ev,n}^{discharge}\left(t\right)$ represents the discharge power of the n-th EV in time period (unit:

DOI: 10.54254/2755-2721/2026.KA29725

kW); and N_{ev} is the total number of EVs participating in the microgrid dispatch. This part calculates and sums up the discharge power of all EVs throughout the entire cycle, then multiplies the result by the degradation cost coefficient to obtain the total battery degradation cost. The third part Q_{cut} corresponds to a portion of unnecessary electricity curbed at the load side, and for every 1 kWh of electricity curbed, an additional 1 yuan needs to be paid. The sum of these three types of costs constitutes the total economic cost of the system within the dispatch cycle, providing a clear objective orientation for the optimal dispatch of the microgrid.

3. Simulation results and analysis

3.1. Simulation scenario setup

This study establishes an optimization model for a wind-PV-storage microgrid with V2G capability, with the primary objective of minimizing the total economic cost, formulated in Eq. (3). Table 2 presents some key parameters of this model.

Table 2. Simulation parameter settings

Parameter	Value	Description
Simulation Duration	24 hours	Time resolution: 1 hour
Rated PV Capacity		Peak output: 140 kW
Rated Wind Power Capacity		Peak output: 55 kW
Maximum Grid Interaction Power	200 kW	
Number of EVs	10 units	Including three user types
Battery Degradation Cost Coefficient β	0.8562 CNY/kWh	Calculated based on the model in Chapter 2

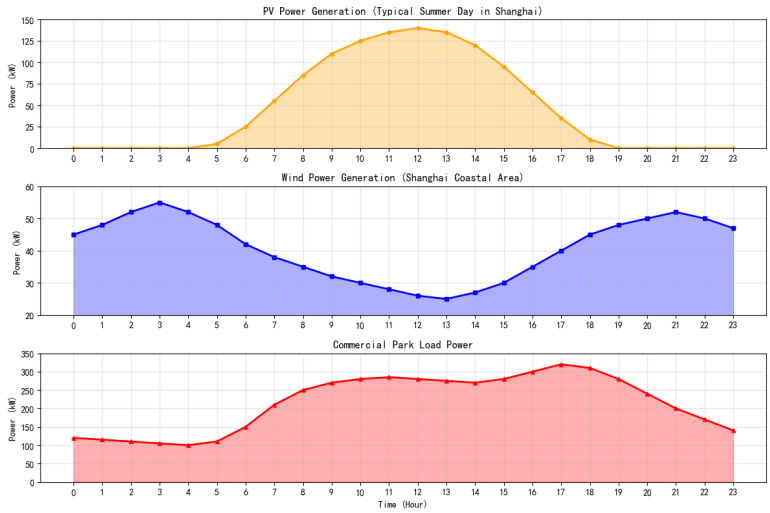

Figure 3. Wind-PV power data

In the model, photovoltaic (PV) power and wind power are both considered. PV generation curve (Figure 3) is referenced from the typical meteorological year data of Shanghai in the PVGIS database. It has a single-peak characteristic and can accurately reflect the local pattern. Moreover, the wind power generation capacity is determined based on the wind resource characteristics of the coastal area in Shanghai. Wind power generation is stronger at night and weaker during the day. The

DOI: 10.54254/2755-2721/2026.KA29725

electricity consumption curve under load is based on the daily electricity usage pattern of the commercial park, showing a double-peak characteristic in the morning and evening. The electricity pricing mechanism (Figure 4) is entirely designed in accordance with the 2023 Shanghai commercial electricity pricing policy, including different electricity price levels for the peak, flat, and off-peak periods, while setting an asymmetric price structure of buying and selling electricity.

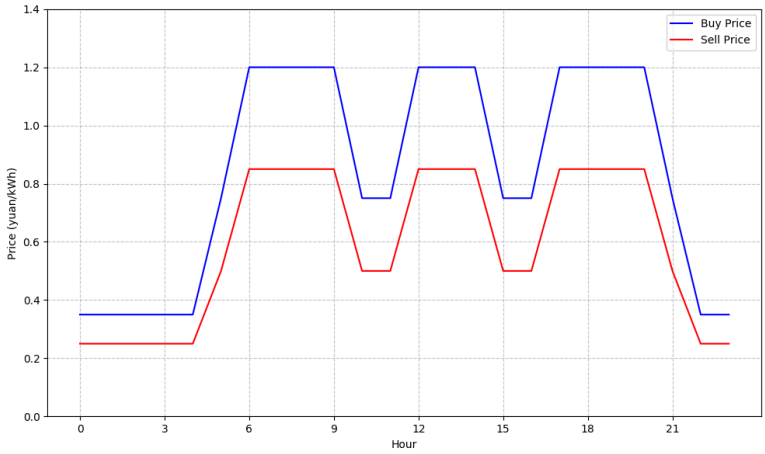

Figure 4. Shanghai electricity pricing mechanism

For the sample EV cluster, it includes 10 vehicles, and these EVs can be categorized into three typical usage types: commuter vehicles, official vehicles/taxis, and night-charging vehicles. Operational constraints outlined in Section 3.2.2 define their initial State of Charge (SOC) ranges, target SOC, specific usage time windows and battery capacities.

3.2. Constraints

All the names of the authors must use the format: first name, middle name initials (optional), surname (last name). Any names that do not conform to this format will be changed by the typesetting team. If your paper has multiple authors, use commas to separate each author and use identifiers to associate an author with an affiliation and an email address (see the first page in this template for an example). Use a superscript asterisk symbol (*) to indicate the corresponding author.

3.2.1. System power balance constraint

Equation (4) serves as the fundamental constraint for the stable operation of the microgrid, ensuring that the total generated power equals the total consumed power at any given time. In this equation, $P_{pv}(t)$ and $P_{wind}(t)$ denote the predicted output of photovoltaic (PV) and wind power in time period t, respectively (unit: kW), both of which are inputs to the model; $P_{load}(t)$ represents the predicted load demand in time period t (unit: kW), also serving as a model input; $P_{grid}(t)$, defined as $P_{grid}^{buy} - P_{grid}^{sell}$, refers to the net exchange power with the main grid; and the term $\sum_{n=1}^{N_{ev}} \left(P_{ev,n}^{discharge}\left(t\right) - P_{ev,n}^{charge}\left(t\right) \right)$ accounts for the total net power contribution of the EV cluster in time period t, where $P_{ev,n}^{discharge}\left(t\right)$ and $P_{ev,n}^{charge}\left(t\right)$ respectively stand for the discharge and charge power of the n-th EV in time period t (unit: kW), and N_{ev} is the total number of EVs

DOI: 10.54254/2755-2721/2026.KA29725

involved. Together, these parameters collectively characterize the power balance relationship between generation and consumption in the microgrid system at each time period.

$$P_{pv}\left(t\right)+P_{wind}\left(t\right)+P_{grid}\left(t\right)+\sum_{n=1}^{N_{ev}}\left(P_{ev,n}^{discharge}\left(t\right)-P_{ev,n}^{charge}\left(t\right)\right)=P_{load}\left(t\right) \tag{4}$$

3.2.2. Constraints of EVs

(a) Grid Interaction Power Constraint: The power exchange between the microgrid and the main grid shall not exceed the physical limit of the connection point.

$$-P_{grid}^{max}\leq P_{grid}\left(t\right)\leq P_{grid}^{max} \tag{5}$$

(b) SOC Upper and Lower Limit Constraint: Prevents overcharging and over-discharging of the battery to extend its service life.

$$SOC_{n}^{min}\leq SOC_{n}\left(t\right)\leq SOC_{n}^{max} \tag{6}$$

(c) Charging and Discharging Power Constraint: Limited by the power upper limit of the on-board charger or charging pile.

$$0\leq P_{ev,n}^{charge}\left(t\right)\leq P_{ev,n}^{max,charge}\left(t\right) \tag{7}$$

$$0\leq P_{ev,n}^{discharge}\left(t\right)\leq P_{ev,n}^{max,discharge}\left(t\right) \tag{8}$$

(d) Charging and Discharging Mutual Exclusion Constraint: A single vehicle cannot be both charging and discharging in the same time period.

(e) Travel Demand Constraint: Must meet the user's basic electricity demand.

$$SOC_{n}\left(T_{n}^{depart}\right)\geq SOC_{n}^{desire} \tag{9}$$

In the formula (9), T_{n}^{depart} is Departure Time of the n-th Vehicle and SOC_{n}^{desire} is Desired SOC at Departure Set by the User.

3.3. Economic comparative analysis

Through the optimal simulation of the microgrid under two scenarios, namely "considering battery degradation cost" and "not considering battery degradation cost", the results show that: when the battery degradation cost is taken into account, the actual total operating cost of the system is 2746.37 yuan, which is 221.20 yuan lower than 2967.57 yuan when the degradation cost is not considered, with a cost reduction rate of 7.45%. From the perspective of cost composition, when the degradation cost is not considered, the grid interaction cost, load curtailment cost, and actual battery degradation cost are 2331.46 yuan, 433.63 yuan, and 486.71 yuan, respectively, and the V2G subsidy revenue is -284.23 yuan; after considering the degradation cost, the grid interaction cost decreases to 2301.01 yuan, the load curtailment cost is 428.25 yuan, the actual degradation cost is significantly reduced to 41.13 yuan, and the V2G subsidy revenue is decreased to -24.02 yuan.

DOI: 10.54254/2755-2721/2026.KA29725

Meanwhile, the V2G discharge capacity has a decrease rate of 91.55%, from 568.45 kWh to 48.04 kWh. Compared to the situation when degradation cost is not considered, total charging capacity decreases from632.33 kWh to 17.48 kWh and total discharging capacity decreases from568.45 kWh to 48.04 kWh when degradation cost is considered. Moreover, other relevant indicators exhibit significant changes as well, especially in net charging capacity, which drops from 63.88kWh to -30.56kWh. This clearly demonstrates that after factoring in the cost of battery degradation, the fundamental behavior of V2G changes significantly.

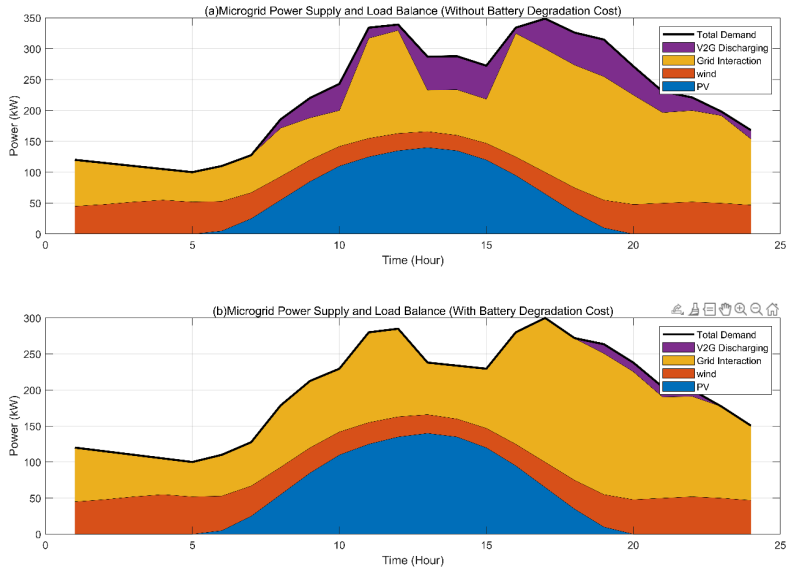

Figure 5. Microgrid power balance: with(b) vs without(a) battery degradation cost

Figure 5 illustrates the power balance between microgrid and load in two distinct cases. In the case without degradation cost consideration (Figure 5a), it can be seen that the model relies on a large amount of V2G discharging during peak electricity price periods (e.g., around 10:00–15:00 and 19:00–21:00) to earn from the electricity price. Conversely, when degradation costs are incorporated (Figure 5b), the amount of V2G discharging is significantly reduced, and it is deployed in a more strategic way. In this situation, the model only prioritizes V2G activation when the combined benefits of avoiding high electricity prices and load-shedding penalties are more beneficial than the battery degradation cost. This adjustment results in a dispatch strategy that is more balanced and sustainable, as the microgrid primarily uses its own renewable energy generation and grid interactions. This approach effectively safeguards the EV batteries from excessive degradation.

Without considering the cost of battery degradation, it can be seen that the model relies on discharging a large amount of V2G during peak electricity price periods to earn from the electricity price.

4. Conclusion

In this paper, we focus on the economic dispatch problem of distributed microgrids under V2G mode, and propose a dispatch strategy that takes into account the cost of battery degradation. First, a battery degradation model was established based on cycle number and DoD to precisely measure the economic impact of V2G cycling. After obtaining the quantified degradation cost, together with grid interaction costs, constitutes the total expenditure. And the dispatch objective function is designed to

DOI: 10.54254/2755-2721/2026.KA29725

minimize the total cost. Simulation results also show that, compared with traditional approaches, the proposed strategy has an advantage in terms of the total cost incurred. This is because, by quantifying the economic impact of each V2G charging and discharging action, the dispatch objective function can effectively balance the grid interaction costs and the battery degradation costs. This approach ensures that during periods when selling electricity price is high, users will not engage deeply in V2G discharging for the superficial economic benefits. Meanwhile, the introduction of electricity price incentive mechanisms has also enhanced the acceptance of this strategy, thereby verifying the practicality of the proposed solution.

This study provides a new modeling method for distributed microgrids including V2G. To encourage user involvement, the system implements a cost-effective compensation mechanism for EV users, thereby increasing their engagement. However, this study still has several limitations. During the stage of building the battery life model, this paper only considers the relationship between DoD and cycle number, without taking into account other key factors such as temperature, charge-discharge rate, etc. In addition, ideal predictions are made for renewable energy generation such as wind-solar output and load demand, ignoring the impacts of natural disasters and unexpected events. For future work, there are mainly two directions. Firstly, the battery degradation model might be improved by integrating multi-stress such as temperature,and combined with advanced algorithms to predict renewable energy generation and load. Second, stochastic or robust optimization methods can be utilized. These steps together can enhance the strategy's practicality and adaptability.

References

[1] Surgan, F., Arango, D., et al. Feasibility of 100% Renewable Electricity by 2035: Pathways, Costs and Reliability. Energy Policy, 2024, 135(2), 110-125.
[2] LBNL & NREL. Growth of Renewable Energy in the United States: Trends and Paths to Decarbonization. Energy Systems Analysis, 2025, 9(1), 50-72.
[3] Xu L, Chen Y, Wang M, et al. Optimization of microgrid operations using renewable energy sources [J]. Energy Science & Engineering, 2024, 12(7): 2456-2474.
[4] U.S. Department of Energy. Vehicles-to-Grid Integration Assessment Report. Washington, DC, USA: U.S.DOE (2025).
[5] Vehicle-to-grid applications and battery cycle aging: A review. Energy & Environmental Science, 2024, 28(4), 1234-1256.
[6] Tawfik M. I., Ali A., Asfoor M. Electric vehicle battery degradation, throughput, and scheduling: A joint optimization approach. Scientific Reports, 2024, 14(1), 21995.
[7] Yang, Q., Li, J., Cao, W., Li, S., Lin, J., Huo, D., & He, H. An improved vehicle-to-grid method with battery longevity management in a microgrid application. Applied Energy, 2020, 260, 114337.
[8] Li B., Huang Q., Zhao L., et al. Economic operation for V2G technology and multiple influence. Energy Science & Engineering, 2025, 8(4), 320-335.