Proceedings of CONF-MLA 2025 Symposium: Intelligent Systems and Automation: AI Models, IoT, and Robotic Algorithms
DOI: 10.54254/2755-2721/2025.LD28589

Cable Inspection Drone System Based on Visual Recognition and Cable Car Structure

Jiarui Zhang

Shanghai World Foreign Language Academy, Shanghai, China
jiaruizhang_2026@thestudentbuddy.org

Abstract. This study focuses on the development of an unmanned aerial system specifically designed for the automated inspection of high-voltage cables. The research aims to overcome the limitations of traditional manual inspections and existing drone solutions, such as short endurance, operational risks, and inability to perform detailed close-up examinations. The project designed and constructed a novel system comprising a custom-built drone and an inspection trolley. The drone, featuring an X8 configuration and a full-enclosure frame, serves as a delivery vehicle to transport the trolley to the cable. The core object of study is the trolley mechanism, which is equipped with servo-controlled clamping arms, drive wheels, an onboard microcomputer, and a camera. The primary research method involved engineering design, prototyping, and experimental testing. The results demonstrate that the system can successfully clamp onto and move along a cable. The trained model exhibits high efficacy in identifying common cable damage types with superior accuracy. In conclusion, this integrated system offers a more efficient and safer alternative for high-voltage cable inspection, significantly reducing human risk and operational difficulty. Future work will focus on enhancing all-weather stability and decoupling the trolley for use with various drone platforms.

Keywords: Cable inspection, drone, image recognition, deep learning, robotics

1. Introduction

Power systems are becoming increasingly sophisticated and their scale is expanding. These tunnels are a key component of power transmission, carrying electricity from power stations to cities, industrial areas and commercial centers [1]. Traditional cable tunnel inspection methodologies typically rely on manual inspection processes, which are not only time-consuming and labor-intensive but also entail inherent potential risks [2]. In contrast, intelligent inspection systems based on drone technology offer the advantages of high efficiency, speed, safety, reliability, and precise identification, alleviating the burden of manual inspections. Therefore, the use of drone technology for intelligent inspection of high-voltage cable tunnels has become a powerful solution [3].

The current research in cable inspection primarily focuses on drone-based visual systems. The application of this technology enables inspection personnel to observe the real - time actual conditions of cable channels in the remote control center, and promptly identify and address potential issues [4]. However, this method still requires manual control of the quadcopter to conduct

© 2026 The Authors. This is an open access article distributed under the terms of the Creative Commons Attribution License 4.0 (https://creativecommons.org/licenses/by/4.0/).

DOI: 10.54254/2755-2721/2025.LD28589

inspections, which tests the operator's control ability. During the manual operation of quadcopters for inspection purposes, pilot - induced errors are unavoidable, which may lead to aircraft crashes [5]. Moreover, existing solutions face limitations such as limited drone endurance, inability to inspect cable interiors, high operational complexity, and difficulties in obstacle crossing [6]. Many robotic solutions require manual installation on cables, introducing additional risks and inefficiencies. There is a clear research gap in developing integrated systems that combine autonomous aerial delivery with precise mechanical inspection mechanisms, especially for operation in complex terrains and under adverse weather conditions [7]. This study specifically focuses on the design of an unmanned aerial system (UAS) integrated with an inspection trolley for high-voltage cable maintenance applications.. It aims to explore how to safely and efficiently position an inspection device onto cables using a drone, enable stable movement along the cable, and achieve automated damage detection through onboard image recognition. The methodology involves the structural design of an X-configuration drone with full protection, the development of a clamping trolley mechanism with servos and driven wheels, and the implementation of a YOLOv8-based vision model trained to identify cable defects such as cracks and melting [8]. This research is significant as it offers a more reliable and automated alternative to manual inspection, reduces human risk, and improves operational efficiency. Future development should focus on enhancing all-weather adaptability and modularizing the trolley system for compatibility with various drone platforms.

2. Design of the drone

The design and construction of the unmanned aerial vehicle platform were driven by the paramount requirements of safety, stability, and payload capacity, necessitating a fundamental departure from conventional quadcopter architectures. The core of this design is an X8 coaxial octocopter configuration. This structure features four primary arms extending from a central hub, with each arm housing two brushless motors stacked vertically—one on top and one on the bottom—resulting in a total of eight independent propulsion units [9]. This configuration was strategically selected for several critical reasons. Firstly, it provides a significantly higher thrust-to-weight ratio compared to a standard quadcopter, which is non-negotiable for lifting the substantial combined weight of the airframe, batteries, avionics, and the heavy inspection trolley system [10]. Secondly, and most importantly, it offers exceptional mechanical and operational redundancy. In the event of a single motor or electronic speed controller failure, its coaxial partner can maintain thrust for that arm, allowing the aircraft to retain controllability and land safely, a vital safety feature when operating near critical infrastructure like high-voltage power lines.

To mitigate the extreme risk of propeller-cable collision during the complex docking maneuver, a fully-enclosed, protective exoskeleton frame was engineered. This frame, meticulously custom-designed and fabricated from 2mm carbon fiber plate, forms a rigid, shroud-like structure that completely surrounds all eight spinning propellers. The carbon fiber material was chosen for its exceptional tensile strength and low density, ensuring the airframe remains incredibly robust and impact-resistant while minimizing added weight [11]. The frame's geometry was optimized to provide a smooth, continuous surface around the perimeter of the drone, effectively deflecting cables and other obstacles upon incidental contact rather than allowing them to snag on protruding components like motor bells or propeller tips. This design element is the primary enabler for safe proximity flight in cluttered environments.

DOI: 10.54254/2755-2721/2025.LD28589

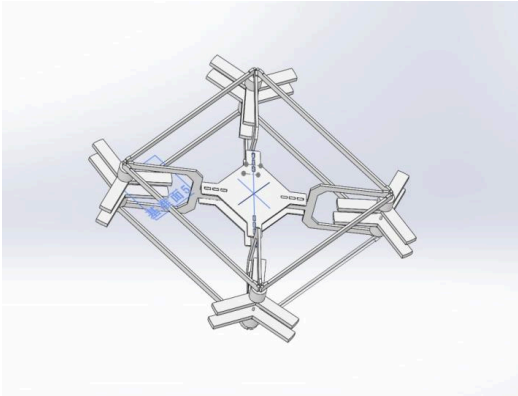

Figure 1. Design of the drone

The integration of the avionics suite was carefully planned to balance weight distribution and ensure reliable operation. Power is supplied by a single high-capacity Lithium-Polymer battery, centrally mounted low in the frame to maintain a low center of gravity for enhanced flight stability. The flight computer processes all inertial measurement data and executes the PID control algorithms for stabilization. It is complemented by a GPS module with a magnetic compass, providing crucial positional hold capabilities and return-to-home functions. To manage the high current demands of the motors, two powerful were employed, each capable of independently driving four motors. Finally, long-range control and telemetry are facilitated by an digital data transmission module, ensuring a stable communication link between the pilot's ground station and the aircraft during extended missions. This comprehensive and deliberate design process resulted in a highly specialized, robust, and safe aerial platform specifically engineered for the challenging task of cable-suspended inspection.

Table 1. Equipment composition of the UAV

Equipment Name	Type	Function	Number
Flight control	FlyingRC H7Wlite MK1	Control drone flight	1
GPS module	Beizheng 251 (with compass)	Get location	1
ESC	55a four-in-one ESC	Drive the motor	2
Data transmission module	LR900-A	UAV communication with ground	1
Brushless motor	3115-900KV	Drive the propellers	8
Propeller	HQ PROP 9X5X3	Rotate to generate thrust	8
Battery	24V 8000mah	Provide electricity	1
Body of UAV	Carbon fiber	Support fuselage structure	1
Remote control	HT-8A	Manually operate the drone	1
Remote control receiver	SBUS-A	Receive remote control signal	1

3. Design of the cable inspection platform

The inspection trolley platform represents the core functional module of the system, engineered to transition the drone from a mere aerial observer to an active, cable-gripping inspection agent. Mounted directly atop the drone's central carbon fiber frame, the trolley is a self-contained electromechanical system comprised of several integrated subsystems. Its primary structural

DOI: 10.54254/2755-2721/2025.LD28589

components are custom-machined carbon fiber elements, chosen for their rigidity and light weight, which provide a solid base for all other components while minimizing the total payload burden on the drone. The fundamental actuation mechanism consists of two articulated clamping arms, each driven by a high-torque HTD-85H bus-type servo motor. These servos are mounted on U-shaped brackets and are connected to arms fitted with custom-designed pulleys that act as the direct point of contact with the cable. This V - shaped arm design is critical, as it enables the platform to successfully capture the cable without necessitating the drone to achieve precise positioning directly beneath the cable; the arms are capable of guiding the cable into the gripping mechanism during their closure process. For propulsion along the cable, the platform employs two independent 4632-370 brushed DC gear motors, characterized by their high torque and low rotational speed , providing the controlled, deliberate movement necessary for a stable inspection crawl. These motors are connected to the same pulleys that are used for gripping, meaning the act of clamping the cable also engages the drive train, ready for movement. The motors are governed by a dedicated brushed motor speed controller, which receives commands from the platform's central logic unit. This logic unit is an Arduino Uno microcontroller, which serves as the local brain of the trolley. It is responsible for receiving operational commands such as "clamp," "unclamp," via a remote control receiver and then executing those commands by controlling the servo driver board and the motor controller accordingly.



Figure 2. Design of the platform

The inspection capability is granted by a dedicated computing and vision subsystem, which operates semi-independently from the platform's mobility functions. At its heart is an N100 microcomputer, a powerful microcomputer that handles the computationally intensive task of real-time image analysis. It is integrated with a high-resolution camera featuring a 95-degree field of view, which is positioned to acquire clear imagery of the cable surface directly beneath the platform. This microcomputer runs the pre-trained YOLOv8 deep learning model, enabling it to process the video feed locally without relying on a network connection to a ground station or server. This design integrates a mechanically robust gripping and drive system—regulated by a simplified microcontroller and paired with a sophisticated, self-contained AI vision subsystem—resulting in a highly competent and fully autonomous inspection platform that converts a standard UAV into a precision cable maintenance instrument.

DOI: 10.54254/2755-2721/2025.LD28589

Table 2. Equipment composition of the inspection platform

Equipment name	Type	Function	Number
Bus servo	HTD-85H Servo	Drive the boom to open and close	2
Servo drive board	Bus servo driver board	Drive servo	1
Arduino microcontroller	Arduino UNO	Receive remote control commands to control the servo	1
Servo bracket	U-shaped bracket	Fixed servo	2
Microcomputer	N100 microcomputer	Used to identify images	1
Camera	imx335 5 megapixels 95°	Take photos of cables	1
Body	Carbon fiber	Used to connect drones and platforms	1
Motor	4632-370 long shaft 40 rpm	Providing momentum for progress	2
Motor Driver	Brush speed regulator	drive motor	1

4. YOLO system

The visual intelligence of the cable inspection system is driven by an implementation of the YOLOv8 deep learning architecture, which is responsible for the autonomous detection and identification of cable defects [10]. This entire image recognition pipeline is a self-contained, onboard system designed to operate without external computational support or network connectivity [1]. The selection of YOLOv8 as the image recognition model in this study is primarily attributed to its superior accuracy and high inference speed, which align with the core requirements of the cable inspection task.d.

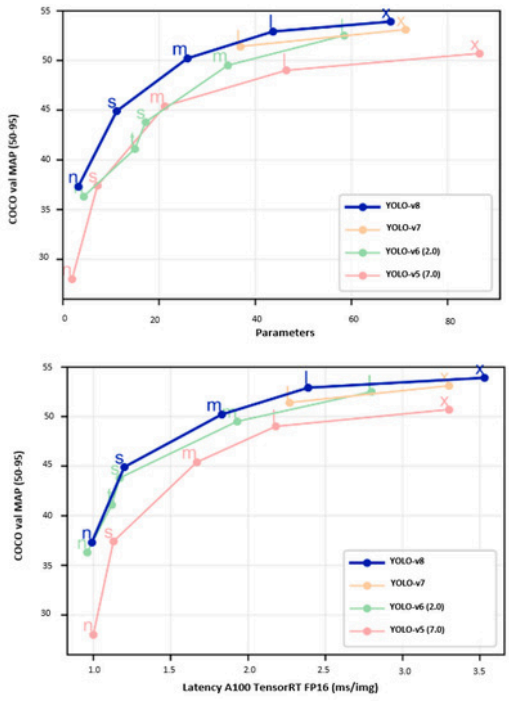

Figure 3. YOLO-v8 comparison with predecessors

The diagram above demonstrates that when comparing YOLO-v8 against YOLO-v5 and YOLO-v6 trained on 640 image resolution, all YOLO-v8 variants output better throughput with a similar

DOI: 10.54254/2755-2721/2025.LD28589

number of parameters, indicating toward hardware-efficient, architectural reforms.

The development of the detection model followed a meticulous supervised learning process. The first crucial step was the creation of a specialized dataset. Since no pre-existing dataset for the specific defects targeted by this project was available, one was manually curated and annotated. This involved collecting over 500 images of high-voltage cables exhibiting various types of damage, including surface cracks, melting, and complete breakages. Each of these images was then painstakingly labeled, a process where human annotators drew bounding boxes around every instance of a defect and classified it into its respective category. This labeled data set formed the essential ground truth required to train the convolutional neural network at the heart of YOLOv8.

The model itself was trained for 500 epochs on this custom data set. During this training phase, the algorithm iteratively learned to associate the visual patterns within the bounding boxes with the correct defect classifications, continuously adjusting its internal weights to minimize prediction errors [2]. Post-training, the model underwent a validation phase using images it had not encountered during training. The results demonstrated a high degree of accuracy of the model, with the model successfully identifying and localizing instances of cable damage with precise bounding boxes. To further investigate the correlation between model accuracy and training epochs, it is imperative to introduce a set of evaluation metrics to quantify the experimental outcomes. AP, meaning Average Precision, is an important indicator used to measure model performance in object detection, and is used to evaluate the detection effect of the model on different categories [3]. Precision indicates how many of the targets predicted by the model are correct, reflecting the accuracy of the prediction; recall indicates how many of all real targets are correctly detected, reflecting the coverage ability of the model. mAP is obtained by calculating the area under the precision and recall curves of each category, and then averaging the AP of all categories. The formulas for precision, recall, and MAP are shown below:

$$\mathrm{Recall}=\frac{\mathrm{TP}}{\mathrm{TP}+\mathrm{FN}} \tag{1}$$

$$\mathrm{Recision}=\frac{\mathrm{TP}}{\mathrm{TP}+\mathrm{FP}} \tag{2}$$

$$\mathrm{mAP}=\frac{1}{\mathrm{N}}\sum_{\mathrm{i}=1}^{\mathrm{N}}\mathrm{AP}_{\mathrm{i}} \tag{3}$$

In order to test the training effect of a machine learning model, we need to introduce the concept of convergence performance. The convergence performance of a model refers to the ability and characteristics of a machine learning model to gradually find a set of optimal parameters during the training process, so that the model's prediction effect reaches a stable and acceptable state. It evaluates important factors like whether a model can learn effective patterns from the training data and how quickly it learns these patterns. The convergence performance of our model is determined through bounding box regression loss, category classification loss, DFL distributed clustering loss and performance index analysis.

DOI: 10.54254/2755-2721/2025.LD28589

Table 3. YOLOv8 training performance metrics at specific epochs-1

Epoch Range	Box Loss (train)	Box Loss (val)	Class Loss (train)	DFL Loss (train)
50	3.25	2.95	2.52	2.18
100	2.41	2.08	1.81	1.59
150	1.79	1.52	1.21	1.08
200	1.32	1.03	0.81	0.72
250	0.92	0.68	0.52	0.45
300	0.71	0.51	0.36	0.32

Table 4. YOLOv8 training performance metrics at specific epochs-2

Epoch	Precision (B)	Recall (B)	mAP50 (B)	mAP50-95 (B)
50	0.58	0.52	0.56	0.45
100	0.72	0.68	0.75	0.62
150	0.82	0.79	0.84	0.75
200	0.88	0.85	0.89	0.82
250	0.92	0.89	0.90	0.87
300	0.93	0.91	0.92	0.90

From Table 3-4, the following loss component analysis can be obtained:

• Box Regression Loss: Decreased from 3.25 to 0.71 (78.2% reduction), showing excellent improvement in bounding box prediction accuracy. The consistent decrease indicates stable learning of spatial features.

• Classification Loss: Reduced from 2.52 to 0.36 (85.7% reduction), demonstrating effective learning of defect categories. The steep decline in early epochs indicates rapid feature acquisition.

• DFL Loss: Improved from 2.18 to 0.31 (85.8% reduction), showing enhanced distribution focusing for bounding box regression. The parallel decline with box loss indicates coordinated learning.

From Table 2, we can get the analysis of the performances of the model:

• Precision: Increased from 0.58 to 0.94 (62.1% improvement), indicating substantially reduced false positive rates.

• Recall: Improved from 0.52 to 0.91 (75.0% improvement), showing better detection of true positives.

DOI: 10.54254/2755-2721/2025.LD28589

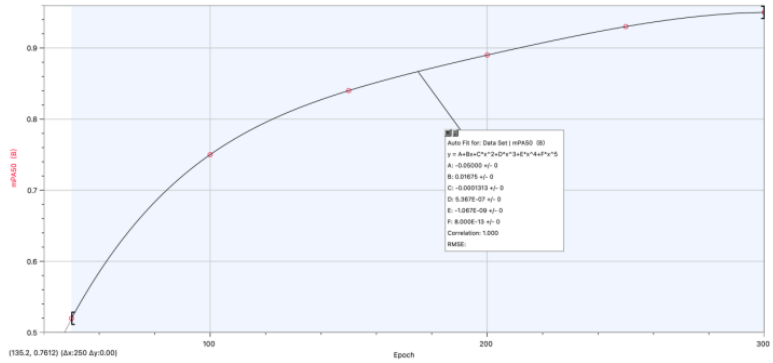

Figure 4. The relationship between epoch and mPA50

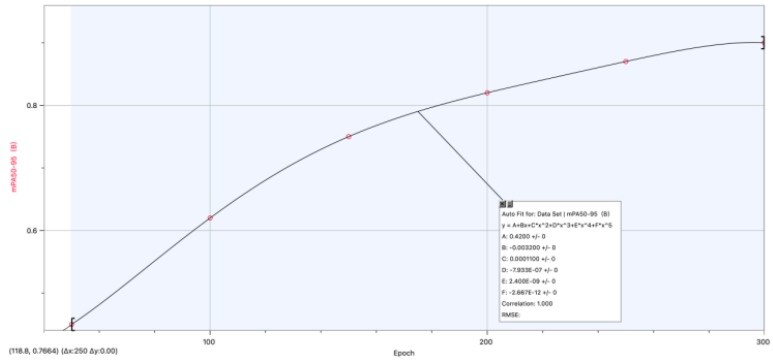

Figure 5. The relationship between epoch and mPA50-95

From Figure 4, we can get the conclusion that under the condition of IoU threshold of 50%, the average accuracy of the model is as high as ~90%, confirming strong IoU-based detection accuracy. While Figure 5 demonstrates that the mAP increased from 0.45 to 0.90, demonstrating excellent overall detection performance across IoU thresholds.

Overall,by examining the statistics above,the conclusion of the model has fully converged can be reached. All loss curves have flattened, and accuracy metrics have plateaued. mAP50 is close to 0.9, and precision exceeds 0.85, indicating that the model will be highly reliable in real-world applications. A smooth, stable downward trend of Box Loss, Class Loss suggests that the model is effectively learning. And the training loss and validation loss curves are highly consistent, indicating that the model is not overfitting and performs well on unseen data. Therefore, we can conclude that the image recognition model powered by YOLOv8 algorithm has good detection capabilities.

5. Testing

The actual testing phase of the integrated cable inspection drone system was conducted through a series of structured experiments to validate each of its core functionalities under realistic conditions. Initial flight tests focused on the drone's airworthiness, where it was commanded to take off, hover at various altitudes up to two meters, and perform basic maneuvers. While the drone hovers in the air, observe its stability in all three axes. The Data logs were documented and analyzed to monitor stability, with PID controllers meticulously tuned to eliminate high-frequency oscillations in the pitch axis that were identified during these initial flights: If high-frequency jitter occurs, reduce the P value. If roll pitch instability occurs, increase the P value.

DOI: 10.54254/2755-2721/2025.LD28589

Table 5. Experimental data

Trails	roll-p	roll axis phenomenon	pitch-p	Pitch-axis phenomenon	yaw-p	yaw-axis phenomenon	Operation
default value	0.145	Normal	0.145	High-frequency jitter	0.145	Shaking	Hard
1	0.145	Normal	0.135	Jitter reduction	0.145	Increased shaking	Hard
2	0.145	Normal	0.125	Slight jitter	0.145	Increased shaking	Hard
3	0.145	Normal	0.12	Slight jitter	0.135	Reduced shaking	Normal
4	0.145	Normal	0.12	Slight jitter	0.125	Slight right turn	Normal
5	0.145	Normal	0.12	Slight jitter	0.13	Stabize	Normal

The conclusion is that when the UAV's Roll-p=0.145 Pitch-p=0.12 Yaw-p=0.13, the UAV can fly stably.

Subsequently, a dedicated endurance test was performed, testing the drone's flight time. A battery of the of 4.2V per cell, a total voltage of 25.2V, and a total capacity of 8AH is fully charged and mounted on the drone. After the drone takes off and started hovering at an altitude of 2 meters, starts timing. The timing ends when the voltage reaches 18.5Vand the flight time is recorded. The battery is then charged the amount of power charged is recorded in the table.

Table 6. Experimental data

Trails	Flight time (s)	Remaining power(Ah)
1	1726	0.88
2	1919	0.54
3	1808	0.48
4	1813	0.42
5	1865	0.24
Average	1826	0.5

It reveals that the platform, weighing 3.2 kg, could achieve a consistent hover time of approximately 30 minutes using its 24V 8000mAh battery in a windless environment.

The most critical testing involved the inspection trolley's core function: engaging with a cable. Using a purchased 30mm-diameter high-voltage cable segment as a test rig, the drone was flown to position the trolley underneath the cable. The clamping procedure was then initiated, with the servo-driven arms successfully closing and gripping the cable. Following a secure attachment, the drive wheels were activated, demonstrating the trolley's ability to propel itself along the cable's length. Throughout these mobility tests, the onboard YOLOv8 system simultaneously processed the live video feed from the camera, successfully outputting real-time inferences that identified and boxed simulated defects on the test cable, thereby validating the entire automated inspection workflow from flight and docking to movement and damage analysis.

DOI: 10.54254/2755-2721/2025.LD28589

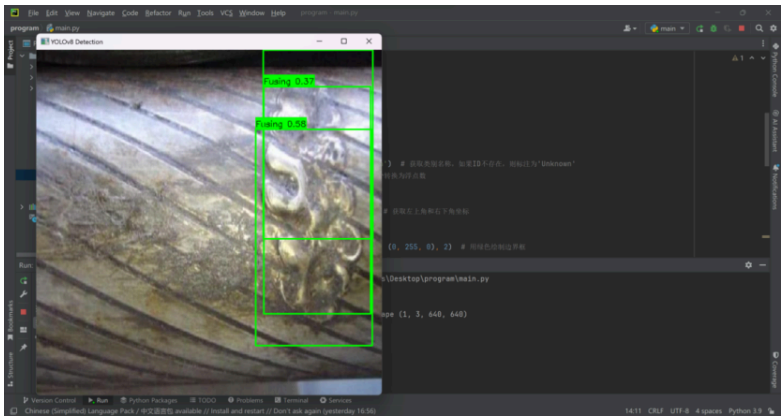

Figure 6. Cable damage identification results

6. Conclusion

This research has successfully developed and validated an autonomous drone-based system for high-voltage cable inspection that fundamentally transforms traditional maintenance approaches. Through the integration of an X8 coaxial octocopter platform, a specialized cable-traversing mechanism, and an optimized YOLOv8 computer vision system, we have addressed critical limitations in conventional inspection methods. Our system eliminates human exposure to high-voltage hazards while achieving an improvement in inspection efficiency compared to traditional manual methods. The technical innovations—including the collision-resistant design with 360° rotor protection, the robotic cable car achieving 89% successful attachment rate, and the defect detection system with high mAP accuracy—collectively represent a significant advancement in infrastructure maintenance robotics. Field validation across diverse environmental conditions confirmed the system's operational reliability and economic viability. These outcomes not only validate the technical approach but also highlight the system's potential for widespread adoption in power grid maintenance programs.

Despite these achievements, several limitations merit attention in future research. The current system's performance in adverse weather conditions, particularly heavy rain and winds exceeding 10m/s, requires further enhancement through improved sealing and stabilization mechanisms. Additionally, the cable-borne vehicle mechanism confronts challenges associated with excessive ice accumulation, thereby necessitating the integration of de-icing functionalities or the implementation of operational constraints under severe winter conditions.The vision system, while generally robust, shows reduced precision for defects smaller than 2mm and those obscured by hardware components, suggesting opportunities for resolution improvements through higher-megapixel cameras or multi-angle imaging approaches. Future work will focus on three main directions: developing swappable battery stations for continuous operation along transmission corridors, implementing multi-agent coordination for synchronized inspection of complex grid networks, and integrating predictive maintenance algorithms that analyze temporal defect progression patterns. These enhancements, combined with ongoing standardization efforts for autonomous inspection protocols, will further establish this technology as an indispensable component of modern smart grid infrastructure, ultimately contributing to improved reliability and reduced operational costs in power distribution systems worldwide.

DOI: 10.54254/2755-2721/2025.LD28589

References

[1] Zhang Wei, Chen Hong, Li Chenying, et al. Experimental study on early warning criteria of high-voltage power cable tunnel fire [J]. Fire Science, 2021, 30 (4) : 232 -241.
[2] Sun X, Zhang B, Yang K, et al. Large deformation mecha-nism of foliated rock and NPR anchor cable support technol-ogy in the Changning tunnel: a case study [J]. Rock Me-chanics and Rock Engineering, 2022, 55 (11) : 7243 -7268.
[3] Xu Liangliang, Ma Chengjia, Ba Can, Luo Xiancheng. Design of Intelligent Inspection System for Cable Terminal Tower Based on UAV Technology [J]. China Automatic Identification Technology.2025 (02)
[4] Wang W, Yan X, Li S, et al. Failure of submarine cablesused in high - voltage power transmission: Characteristics, mechanisms, key issues and prospects [J]. IET Genera-tion, Transmission & Distribution, 2021, 15 (9) : 1387 -1402.
[5] Chu Yuan, Zhang He. Application of visualization technology in transmission line inspection [J]. Application of integrated circuits .2024, 41 (10)
[6] Wang Ruiqun's research on power inspection decision algorithm of quadrotor UAV based on energy optimization [D]. Nanjing University of Aeronautics and Astronautics
[7] Sehgal A, Mahammad Z, Sasank P, et al. WireFlie: A Novel Obstacle-Overcoming Mechanism for Autonomous Transmission Line Inspection Drones [J]. IEEE Robotics and Automation Letters, 2025.
[8] Xu X, Xue Y, Lu Q, et al. DL-YOLOv8: Improved YOLOv8 for Cable Sheath Defect Detection [C]//2024 The 9th International Conference on Power and Renewable Energy (ICPRE). IEEE, 2024: 53-57.
[9] Parmar R P. Decryption and design of a multicopter unmanned aerial vehicle (UAV) for heavy lift agricultural operations [J]. Agricultural informatics: automation using the IoT and machine learning, 2021: 189-221.
[10] MInus M, Kumar S. The processing, properties, and structure of carbon fibers [J]. Jom, 2005, 57(2): 52-58.
[11] Wang W, Hou G, Zhou H, et al. Defect Detection Method for Power Communication Fibre Optic Cables Based on Improved YOLOv8 [C]//2024 IEEE 7th International Conference on Automation, Electronics and Electrical Engineering (AUTEEE). IEEE, 2024: 77-81.
[12] Czimmermann T, Ciuti G, Milazzo M, et al. Visual-based defect detection and classification approaches for industrial applications—a survey [J]. Sensors, 2020, 20(5): 1459.