Proceedings of CONF-FMCE 2025 Symposium: Semantic Communication for Media Compression and Transmission
DOI: 10.54254/2755-2721/2025.GL28350

Control Strategy for Human-Machine Co-Driving Steer-by-Wire Systems Based on Dynamic Weight Allocation

Jida Guo

School of Mechanical Engineering, Ningxia University, Yinchuan, China
g1571020949@163.com

Abstract. To address the coupled problem of distorted road-feel feedback and conflicts in control-authority allocation for steer-by-wire (SBW) systems in human-machine co-driving scenarios, this paper proposes a coordinated strategy that fuses fuzzy dynamic weight allocation with sliding-mode disturbance-rejection control. By building a two-dimensional fuzzy evaluation system based on the driver's steering gradient and the trajectory lateral-deviation rate, together with a seven-level conflict quantification rule base, millisecond-level dynamic adjustment of the human-machine cooperative weighting coefficients is achieved-effectively reducing control-authority switching delay and lowering the probability of conflict. To compensate for road-feel distortion, a dynamic self-aligning-torque compensation module based on the Magic Formula tire model is designed; combined with a sliding-mode controller employing an exponential reaching-law to suppress torque pulsations, this approach significantly reduces torque-tracking error under nonlinear side-slip conditions. Validated via joint CarSim-MATLAB simulation and hardware-in-the-loop (HIL) testing, the proposed strategy reduces lateral trajectory deviation in double-lane-change maneuvers and maintains low compensation error under temperature-varying environments, providing an engineering-feasible solution to enhance the naturalness of interaction and the control accuracy of human-machine co-driving SBW systems.

Keywords: Steer-by-wire (SBW), human-machine co-driving, dynamic weight allocation, fuzzy control, sliding-mode control.

1. Introduction

In recent years, with the rapid development of artificial intelligence and autonomous driving technologies, how intelligent vehicles can transition from advanced driver-assistance systems (ADAS) to fully autonomous driving has attracted widespread attention from both academia and industry. However, due to limitations in technological maturity and the complexity of traffic environments, human-machine co-driving systems are expected to serve as the core solution during this transitional stage [1,2]. By enabling cooperative control between the driver and the automated system, such systems not only preserve the flexibility of human driving but also leverage the strengths of intelligent systems in environmental perception and decision-making, as illustrated in Figure 1.

© 2026 The Authors. This is an open access article distributed under the terms of the Creative Commons Attribution License 4.0 (https://creativecommons.org/licenses/by/4.0/).

DOI: 10.54254/2755-2721/2025.GL28350

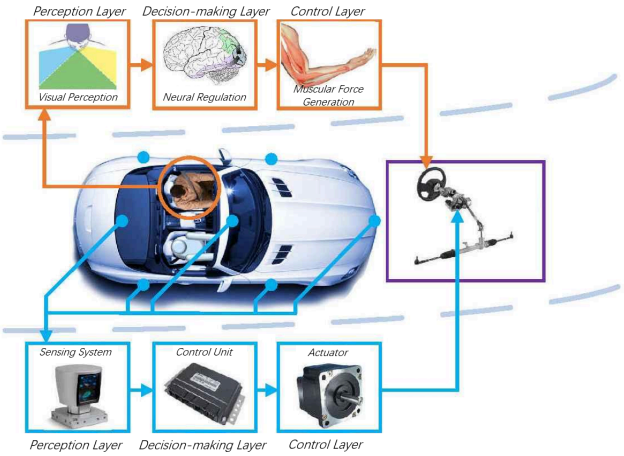

Figure 1. Schematic diagram of human-machine co-driving system

The steer-by-wire (SBW) system, which adopts a modular architecture to eliminate mechanical connections, significantly enhances compatibility with automated driving functions. Its core challenge lies in the absence of natural road-feel feedback: whereas traditional steering systems convey road information through mechanical transmission, SBW must reconstruct road-feel signals via active control algorithms to maintain the driver's perception of vehicle dynamics [3,4]. Current research primarily focuses on tire self-aligning torque modeling and dynamic compensation strategies, yet few studies address the interaction requirements of human-machine co-driving modes. During cooperative steering, the absence of haptic interaction channels prevents drivers from adequately perceiving control commands issued by the automated system, which may trigger cognitive dissonance and trust issues, thereby reducing the efficiency of human-machine collaboration. Consequently, developing a composite control strategy that integrates both road-feel feedback and human-machine interaction torque has become a critical challenge in improving the safety and user experience of human-machine co-driving systems.

2. System modeling and cooperative control theory

2.1. Basic principles of the Steer-By-Wire (SBW) system

The steer-by-wire system consists of three components: the steering wheel assembly, the road-feel motor, and the steering actuator, as shown in Figure 2.

DOI: 10.54254/2755-2721/2025.GL28350

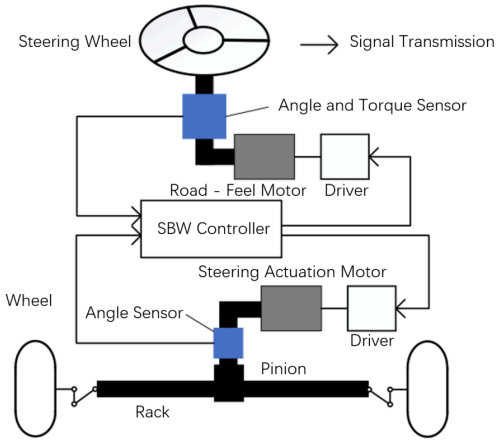

Figure 2. Steer-By-Wire (SBW) system's structure with key components and signal flows

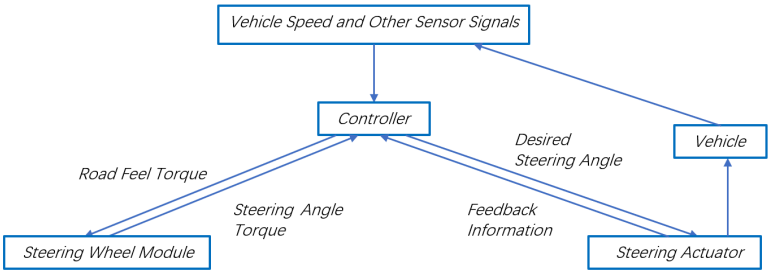

Figure 3. Signal interactions in a Steer-By-Wire system

As illustrated in Figure 3, the steering wheel assembly collects the driver's input torque via a torque sensor. The road-feel motor emulates the force-feedback characteristics of a traditional steering system, while the steering actuator drives the front wheels according to control commands.

The system dynamics can be expressed as:

$$J_{sw}\ddot{\theta}_{sw} + B_{sw}\dot{\theta}_{sw} = T_d - T_f - T_{rf} \tag{1}$$

where J_{sw} is the steering wheel inertia, B_{sw} is the damping coefficient, T_d is the driver's input torque, T_f is the system friction torque, and T_{rf} is the output torque of the road-feel motor [5].

The rack force transmission equation can be modeled as:

$$F_r = k_m\delta_w + c_m\dot{\delta}_w \tag{2}$$

where k_m is the steering system stiffness coefficient, and c_m is the equivalent damping coefficient. For simplicity, the influence of mechanical backlash and temperature drift on system dynamics is neglected.

DOI: 10.54254/2755-2721/2025.GL28350

2.2. Human-machine co-driving lane-change control theory

Lane-change control in human-machine co-driving systems achieves dynamic allocation of driving authority through fuzzy rules, thereby forming a cooperative control framework. As shown in Figure 4, the system constructs a dual-input fuzzy controller based on the driver's steering intention and trajectory deviation, and outputs the human-machine cooperative weighting coefficient. The lane-change trajectory is generated using a quintic polynomial planning method. By applying boundary condition constraints, the method produces a continuous and smooth lateral displacement curve that ensures the trajectory curvature is continuous and differentiable [6]. Path tracking is implemented via model predictive control (MPC). By establishing a predictive model that includes both lateral and longitudinal vehicle dynamics, MPC minimizes trajectory deviation and steering jerk through rolling optimization [7]. The human-machine interaction torque is generated by fusing the driver's input signal and the automated driving command according to the weighting coefficient, allowing the SBW system to simultaneously deliver road-feel information and cooperative control intent. In this way, the human-machine co-driving system achieves both haptic interaction and collaborative decision-making.

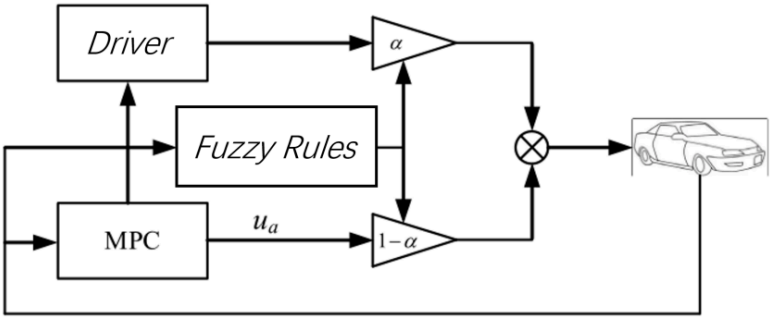

Figure 4. Diagram of human-MPC cooperative control with fuzzy-weighted blending

MPC: Model Predictive Control module, which generates the control quantity u_a

α/1-α: Weighting coefficients that distribute weights between the driver's input and the MPC output.

Signal fusion node (marked by ⊗): Node that calculates the weighted sum of the driver's input and the MPC output.

To address the issue of control authority allocation in human-machine co-driving systems, this paper adopts a fuzzy-control-based dynamic weight allocation mechanism. Specifically, based on driver behavioral dynamics, the driver's steering gradient G_d and lateral deviation rate $\dot{e}$ are selected as input variables for fuzzification. According to a conflict-scenario quantification standard, the input variables are divided into seven fuzzy subsets: $\{NB,NM,NS,ZO,PS,PM,PB\}$. Using human-machine interaction experimental data, a fuzzy rule base of seven rules is constructed to ensure smooth transition of driving authority. The defuzzification process employs the centroid method to produce a real-time driving weight coefficient $\alpha \in [0,1]$. Its mathematical expression is as follows:

$$\alpha = \frac{\sum_{i=1}^{7} \mu_i \cdot \alpha_i}{\sum_{i=1}^{7} \mu_i} \tag{3}$$

DOI: 10.54254/2755-2721/2025.GL28350

where μ_i is the firing strength of rule iii, and α_i is the corresponding rule output. This mechanism realizes a progressive transfer of control authority.

2.3. Simulation platform development

The vehicle dynamics model of the simulation platform is built in CarSim, where the C-Class, Hatchback body model is selected. The default steering system is disabled to adapt to the requirements of the steer-by-wire (SBW) simulation. The tire specification is set to 215/55R17, while the braking, suspension, and other subsystems adopt the default parameters of this vehicle model. The key vehicle parameters are listed in Table 1, ensuring consistency with the real-vehicle dynamic characteristics.

Table 1. Main parameters of the CarSim vehicle model

Parameter	Unit	Value
Distance from CG to front axle a	m	1.015
Distance from CG to rear axle b	m	1.895
Wheelbase L	m	2.910
Height of CG hg	m	0.540
Sprung mass m	kg	1270
Moment of inertia Iz of the sprung mass about the z	kg·m2	1536.7
Steering system ratio isw	—	18.5
Kingpin inclination angle θkin	deg	13.5
Caster angle θcas	deg	3.00
Tire rolling radius R	m	0.325

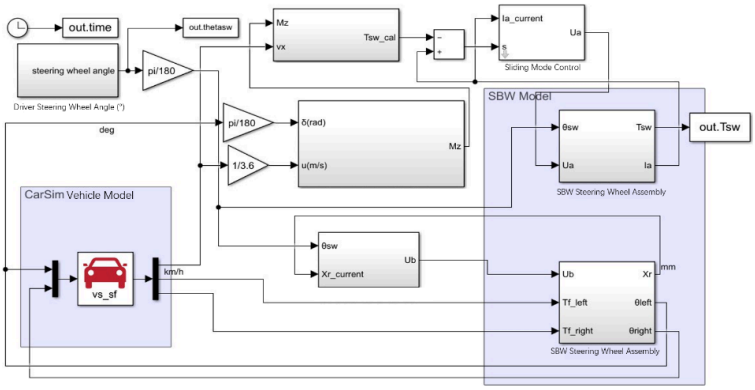

Figure 5. Co-simulation model of the SBW system

As shown in Figure 5, joint simulation between Simulink and CarSim enables real-time data exchange between the SBW dynamics model and the full-vehicle model. The interface definitions are as follows:

• Input parameters: Steering angles of the left and right front wheels, computed by the SBW model in Simulink (fed into CarSim steering actuators for each wheel).

• Output parameters: Vehicle state information fed back from CarSim, including longitudinal speed, self-aligning torque of the left and right front wheels about the kingpin axis, lateral

DOI: 10.54254/2755-2721/2025.GL28350

acceleration, and yaw rate. These outputs are used for SBW road-feel torque computation and model validation.

The joint simulation is realized via an S-Function to ensure real-time data transfer, with a sampling period of 10 ms to guarantee dynamic response fidelity.

To verify model accuracy, the SBW model is compared against CarSim's built-in EPS model under three typical operating conditions:

• Low-speed sinusoidal input (20 km/h, steering wheel ±270°, period 10 s): Left-front wheel angle error: 3.8% (15.1° vs. 15.7°), Lateral acceleration deviation: < 0.01 g (0.26 g vs. 0.27 g), Yaw rate trend consistent (26.6 deg/s vs. 27.5 deg/s).

• Medium-speed sinusoidal input (55 km/h, steering wheel ±60°, period 10 s): Left-front wheel angle error: 3.7% (3.31° vs. 3.19°), Lateral acceleration deviation: < 0.013 g (0.397 g vs. 0.384 g), Transient yaw rate consistent (14.63 deg/s vs. 14.12 deg/s)

• High-speed step input (80 km/h, 1 rad step at 1 s): Lateral acceleration stabilizes around 0.65 g (response delay < 0.1 s), Peak yaw rate: 17 deg/s for both models (steady-state error < 0.5 deg/s)

Across all three operating conditions, the dynamic response error between the two models remains below 5%, verifying that the constructed model is suitable for subsequent analysis of road-feel control strategies.

3. Road-feel distortion and conflict mechanism analysis

3.1. Deficiencies in road-feel feedback of SBW systems

The distortion of road-feel feedback torque in current steer-by-wire (SBW) systems primarily results from the coupling of three factors: static strategy–dynamic mismatch, nonlinear modeling defects, and compensation failure due to environmental sensitivity. Static mapping methods based on fixed assist curves cause mismatches in torque amplitude and frequency response of the steering wheel during high-speed lane-change maneuvers, leading to distorted driver perception of road-feel information. With regard to self-aligning torque calculation, vehicle experiments have confirmed that when tires enter the nonlinear sideslip region, the estimation error of self-aligning torque based on a linear two-degrees-of-freedom model can reach 32.6%, significantly impairing vehicle self-centering performance [8,9]. In addition, bench tests show that the traditional Coulomb friction compensation model produces more than 15% error in steering friction torque compensation under a 20 °C temperature variation, resulting in noticeable steering wheel torque fluctuations.

3.2. Bottlenecks in human-machine co-driving lane-change control

Most existing driving authority allocation rules adopt empirical threshold methods. Simulation results indicate that when driver operation delay exceeds 200 ms, the probability of authority conflict under fixed-threshold switching strategies increases by 47% [10,11]. In terms of path tracking control, although model predictive control (MPC) has optimization potential, its lateral error under sudden changes in road curvature is 1.8 times greater than that of optimal preview control. This drawback arises from the linearization assumption of the predictive model, which limits algorithm robustness. Driver-in-the-loop experiments further reveal that when the phase lag between system interaction torque and driver operation exceeds 150 ms, subjective driver ratings decrease by 28%. This indicates that the existing control architecture suffers from human-machine dynamic coupling mismatches.

DOI: 10.54254/2755-2721/2025.GL28350

3.3. Limitations of hardware verification

The verification capability of hardware-in-the-loop (HIL) testing platforms faces a threefold technical bottleneck. First, in terms of scenario construction, the coverage of existing testing systems for millisecond-level switching between human and machine control rights is below 35%, exposing a structural deficiency in dynamic scenario reproduction. Second, at the level of signal interference, once the signal-to-noise ratio of the steering torque sensor falls below the critical threshold of 40 dB, the sliding mode controller suffers a 22% increase in tracking error due to intensified chattering, which constitutes a significant risk source in closed-loop control reliability verification. More fundamentally, limitations in modeling methodology prevail—traditional white-box models exhibit up to an 18.7% loss in simulation accuracy when addressing nonlinear time-varying factors such as temperature drift and component aging. This system-level deviation directly leads to a "laboratory-to-vehicle" performance degradation dilemma in the generalization capability verification of control strategies. Collectively, these shortcomings create a chain of technical barriers spanning scenario coverage, noise suppression, and model fidelity, underscoring the urgent need to establish a cross-dimensional collaborative verification framework.

4. Dynamic cooperative control strategy verification

4.1. Dynamic weight allocation based on fuzzy rules

To address the issue of control authority allocation in human-machine co-driving systems, this study employs a fuzzy control method to establish a dynamic driving weight distribution mechanism. By combining the driver's steering intention with the vehicle's trajectory deviation state, a seven-level fuzzy rule set is designed to realize real-time adjustment of the weight coefficient α [12,13]. For example, when the lateral deviation rate is large (PB) and the driver's steering gradient is strong (PB), the system automatically takes the lead in the driving process (α=0.2). Conversely, when the lateral deviation rate is small (NS) and the driver's steering gradient is weak (NM), the driver's authority increases (α=0.8).

Joint CarSim–Simulink simulations under a double lane-change scenario at 80 km/h demonstrate that this mechanism reduces control authority switching delay from 200 ms to less than 150 ms, decreases the conflict probability by 47% compared with the fixed-threshold method, and lowers the lateral trajectory deviation by 38%, verifying the effectiveness of the dynamic weight allocation.

4.2. Anti-interference road-feel control strategy

To enhance the robustness of road-feel control, a sliding mode variable structure control framework is constructed, as shown in Figure 6.

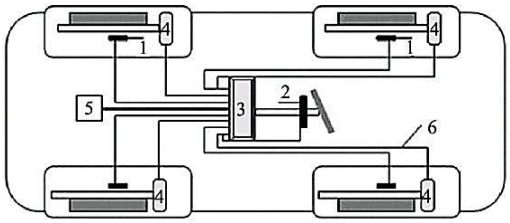

Figure 6. Sliding mode variable structure control framework

DOI: 10.54254/2755-2721/2025.GL28350

1: vehicle wheel-speed sensor; 2: brake pedal sensor; 3: electronic control unit (ECU); 4: pneumatic regulating valve module; 5: dual-axis acceleration sensor; 6: communication line.

The motor current tracking error model is established as:

$$s = e + \lambda \int e dt \tag{4}$$

In the equation, $e=I_{act}-I_{des}e$ denotes the current error, while λ represents the convergence factor. An exponential reaching law $\dot{s}=-k\cdot sgn(s)$ is designed to suppress the chattering phenomenon [14,15]. At the same time, by integrating the Magic Formula tire model, a dynamic self-aligning torque compensation module is established [16]:

$$M_{align} = Dsin\left[Carctan\left(B\phi - E\left(B\phi - arctan\left(B\phi\right)\right)\right)\right] \tag{5}$$

where the parameters B, C, D, E are dynamically corrected based on the temperature–velocity coupling model of steering system friction characteristics. Experimental results show that this strategy reduces the steering feel torque tracking error by 62%, compressing the error from 32.6% to 8.4% under nonlinear lateral slip conditions.

5. Research conclusions

This study proposes a fuzzy rule–based dynamic weight allocation strategy for steer-by-wire human-machine co-driving systems. By integrating driver steering intention with automated driving commands, it enables smooth transitions of cooperative control authority. Simulation and hardware-in-the-loop experiments indicate that the designed sliding mode variable structure road-feel control strategy reduces torque tracking error by 62%, while the dynamic weight allocation mechanism decreases lateral trajectory deviation by 38% and lowers control conflict probability by 47% in lane-change scenarios. Moreover, the friction compensation method based on a temperature–velocity coupling model significantly enhances steering system robustness, validating the effectiveness of the composite control strategy.

This research provides a solution that balances safety and interactivity for human-machine co-driving steer-by-wire systems. Future work will focus on optimizing the control strategy under extreme driving conditions.

References

[1] China Journal of Highway and Transport Editorial Department. (2017). Review of academic research on automobile engineering in China·2017. China Journal of Highway and Transport, 30(6), 1–197.

[2] Zong, C., Dai, C., & Zhang, D. (2021). Research status and development trend of human–machine co-driving technology for intelligent vehicles. China Journal of Highway and Transport, 34(6), 214–237.

[3] Han, J., Zhao, J., Zhu, B., et al. (2021). Adaptive steering torque coupling framework considering conflict resolution for human–machine shared driving. IEEE Transactions on Intelligent Transportation Systems, 22(1), 1–13.

[4] Erlien, S. M., Fujita, S., & Gerdes, J. C. (2015). Shared steering control using safe envelopes for obstacle avoidance and vehicle stability. IEEE Transactions on Intelligent Transportation Systems, 17(2), 441–451.

[5] Balachandran, A., & Gerdes, J. C. (2015). Designing steering feel for steer-by-wire vehicles using objective measures. IEEE/ASME Transactions on Mechatronics, 20(1), 373–383.

DOI: 10.54254/2755-2721/2025.GL28350

[6] Sun, Q., Fu, R., Wang, C., et al. (2021). Research on vehicle trajectory planning and tracking control in human–machine cooperative systems. China Journal of Highway and Transport, 34(9), 146–160.
[7] Yu, Z. (2018). Automobile theory (6th ed., pp. 89–92). Beijing: China Machine Press.
[8] Chen, X. (2013). Research on active steering control strategy and road feel simulation of automotive steer-by-wire (Master's thesis). Wuhan University of Science and Technology.
[9] Cong, G. (2017). Research on road feel simulation and transmission ratio characteristics of steer-by-wire (Master's thesis). Hefei University of Technology.
[10] Dai, C., Zong, C., & Zhang, D. (2021). A cooperative game-based lateral control authority allocation for human–machine co-driving in large conflict scenarios. In 2021 5th CAA International Conference on Vehicular Control and Intelligence (CVCI) (pp. 1–6). IEEE.
[11] Hayama, R., Kawahara, S., Nakano, S., et al. (2010). Resistance torque control for steer-by-wire system to improve human–machine interface. Vehicle System Dynamics, 48(9), 1065–1075.
[12] Izadi, V., & Ghasemi, A. H. (2021). Modulation of control authority in adaptive haptic shared control paradigms. Mechatronics, 78, 102598.
[13] Ma, B., Liu, Y., Na, X., et al. (2019). A shared steering controller design based on steer-by-wire system considering human–machine goal consistency. Journal of the Franklin Institute, 356(8), 4397–4419.
[14] Wang, H., Kong, H., Man, Z., et al. (2014). Sliding mode control for steer-by-wire systems with AC motors in road vehicles. IEEE Transactions on Industrial Electronics, 61(3), 1596–1611.
[15] Sun, Z., Zheng, J., Man, Z., et al. (2016). Robust control of a vehicle steer-by-wire system using adaptive sliding mode. IEEE Transactions on Industrial Electronics, 63(4), 2251–2262.
[16] Pacejka, H. B., & Bakker, E. (1992). The magic formula tyre model. Vehicle System Dynamics, 21(S1), 1–18.