Proceedings of CONF-MLA 2025 Symposium: Applied Artificial Intelligence Research
DOI: 10.54254/2755-2721/2025.BJ27296

Research and Prospect of Multi-Microgrid Energy Interactive Management

Sichao Chen[1*], Hao Zhang[1], Haifeng Qiu[1]

[1]*School of Electrical Engineering, Xi'an Jiaotong University, Xi'an, China*
**Corresponding Author. Email: Chensichao@stu.xjtu.edu.cn*

Abstract. With the increasing penetration of new energy devices such as photovoltaic (PV) systems, energy storage systems, and charging piles in the power grid, the one-way energy transmission mode of the traditional distribution network is transforming into a two-way energy flow mode. Although this transformation improves energy utilization efficiency, the characteristics of two-way energy flow and increased load fluctuation in the active distribution network also pose new challenges to the safe and stable operation of the power grid. Currently, effective adjustment can be achieved at the park or building level, but the governance of regional energy fluctuations still faces technical bottlenecks, leading to the need for some regions to limit the access capacity of new distributed energy resources (DERs). Energy interconnection and energy management of multi-microgrids (MMGs) is an important approach to address this situation. By establishing threshold power constraints and a cross-section energy mutual aid mechanism, multi-microgrids can not only enhance the stability of the power grid but also realize the coordinated improvement of low-carbon performance and economic benefits in the region. This paper first analyzes the basic architecture of a single-point microgrid, then discusses the communication architecture, control mode, and control strategy of the microgrid system, and finally prospects the future research directions, aiming to provide theoretical references and technical support for the collaborative control of more microgrids under the scenario of high-penetration distributed energy.

Keywords: multi-microgrid, microgrid group, energy management, active distribution network

1. Introduction

At present, China's fossil energy is still in the bottleneck of energy management. The world is actively exploring new energy forms, and renewable energies such as wind energy and solar energy provide effective solutions to energy problems [1].

When new energy is used as the power supply source, there are uncertainties on both the power generation side and the user side [2]. If the traditional power grid operation mode is adopted, when new energy reaches a certain proportion, it will inevitably bring a significant impact on the stability and safety of power grid operation [3]. A microgrid (MG) can be regarded as a controllable "cell" of

© 2026 The Authors. This is an open access article distributed under the terms of the Creative Commons Attribution License 4.0 (https://creativecommons.org/licenses/by/4.0/).

DOI: 10.54254/2755-2721/2025.BJ27296

the power system; for example, this "cell" can be controlled as a simple dispatchable load to meet the second-level response requirements of the transmission system [4].

With the continuous increase in the penetration rate of uncertain renewable energies in microgrids, the coordinated operation of shared energy storage and microgrid clusters is an effective means to improve their absorption capacity [5]. There have been many engineering cases of energy management within a single microgrid, but conducting research on energy management between multiple microgrids—including the development of energy balance strategies and the establishment of power generation and consumption models—still faces considerable challenges [6].

From the perspective of current research, energy-interconnected microgrid clusters must not only consider the characteristics of each energy supply network itself but also the interaction and influence between different systems during operation [7]. This paper introduces and analyzes the typical single-microgrid architecture [8], the control logic and communication mode of multi-microgrids, and the research status of multi-microgrid operation strategies, and prospects the problems to be solved and the next research directions in multi-microgrid energy management [9].

2. Topology of microgrids

2.1. Typical topology of single-point microgrids

The primary structure of a typical single-point microgrid mainly includes three basic forms: pure AC bus, DC bus-dominated, and hybrid bus [10].

2.1.1. AC microgrid

The AC microgrid has a simple composition structure and allows flexible access to PV systems, energy storage systems, charging piles, etc [11]. On the AC bus, distributed generation (DG) and energy storage systems are connected to the microgrid bus either directly or indirectly, and its structure is shown in Figure 1.

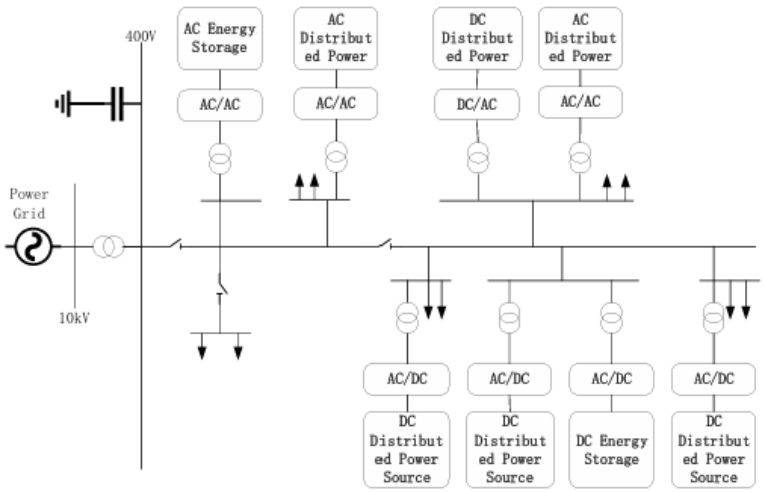

Figure 1. AC microgrid structure

An AC microgrid with an AC bus needs to be equipped with a power conversion system (PCS), a device that meets the requirement of AC-DC conversion [12]. However, due to energy loss during the conversion process, the energy utilization efficiency of the AC microgrid is reduced [13].

DOI: 10.54254/2755-2721/2025.BJ27296

2.1.2. DC microgrid

In a DC microgrid system, the DC bus connects devices such as DG, energy storage systems, and loads, and then connects to the main grid through a PCS, with its structure shown in Figure 2. The DC microgrid adopts DC conversion technology to achieve differentiated power supply, which can supply electrical energy to loads with different voltages [14].

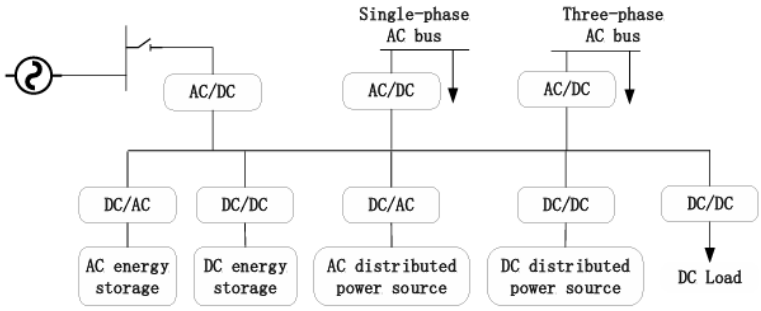

Figure 2. DC microgrid structure

2.1.3. Hybrid microgrid

The structure of the hybrid microgrid is shown in Figure 3, where AC and DC buses coexist [15]. It comprehensively considers the demand for AC and DC power on the energy consumption side, supplies power to different loads respectively, reduces the number of power electronic converters used in pure AC or DC microgrids, and improves comprehensive efficiency [16].

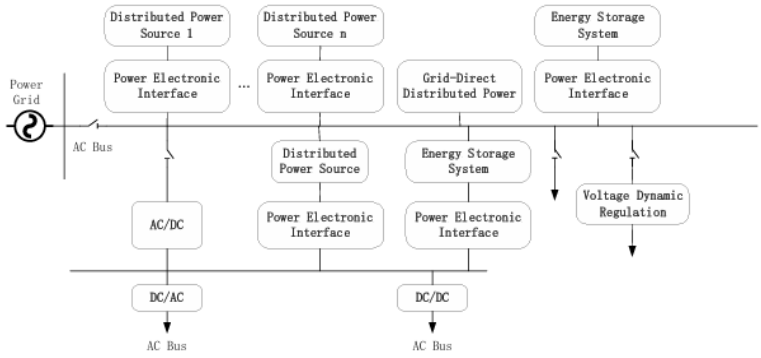

Figure 3. Hybrid microgrid structure

In hybrid microgrids, multi-voltage DC buses are sometimes used, which can not only meet the access requirements of different voltage levels but also adapt to distributed PV power generation, charging piles, and energy storage systems [17]. However, the energy management system of hybrid microgrids often faces problems such as inconsistent protocols and high control difficulty [18].

2.2. Typical topology of multi-microgrids

Factors such as power grid harmonics, voltage, and frequency all pose challenges to the stable operation of the power grid [19]. To address these challenges, measures such as energy storage and reactive power compensation can be adopted [20]. A multi-microgrid (MMG) can be defined as a mode where multiple low-voltage microgrids or new energy users within a region are

DOI: 10.54254/2755-2721/2025.BJ27296

interconnected, and a certain control method is adopted to realize the interaction of information flow and energy flow. The topology design of MMGs should be based on energy dispatch and management [21] to improve system stability.

2.2.1. Centralized control topology

The physical topology of centralized control manages each microgrid uniformly through a central energy management system, and the interior of each microgrid is optimized according to its own optimization objectives [22]; the typical topology is shown in Figure 4.

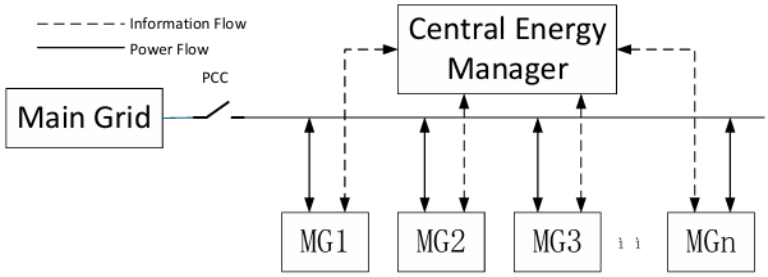

Figure 4. Centralized MMG topology structure

With the increase in the number of connected microgrids, the volume of information exchange data and the frequency of energy interaction increase sharply. The central energy manager cannot meet the real-time requirements of the power system dispatch in terms of calculation speed [23].

2.2.2. Distributed logical topology

Compared with the centralized logical topology, the distributed control topology has higher flexibility.

For the distributed MMG topology, the control system of the distributed microgrid performs power flow calculation and control through each microgrid in the distributed system, thereby achieving a certain level of regional control and re-stabilizing the operation [24]. The topology of distributed multi-microgrids (MMGs) has diversity.

2.2.3. Hybrid hierarchical logical control topology

The hybrid hierarchical MMG topology stratifies the central energy router to solve its performance bottleneck problem, effectively alleviating the advantages of the central energy router in the centralized topology.

DOI: 10.54254/2755-2721/2025.BJ27296

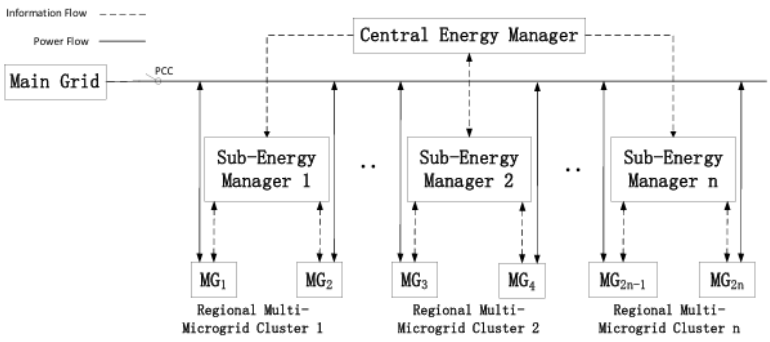

Figure 5. Hybrid MMG topology structure

In the hybrid control topology of the hybrid MMG topology, a single microgrid only interconnects with adjacent microgrids, as shown in Figure 5. The operation between these microgrids is coordinated through a sub-energy management system [25]. The sub-energy management system quickly transmits demand information, coordinates adjacent microgrids to provide energy support, and reports to the central energy management [26]. The design of the hybrid control topology can consider introducing a multi-level energy manager mode to prevent the overall system paralysis caused by the failure of a single controller [27].

In terms of control levels, some literatures have also proposed a multi-agent system (MAS). Through hierarchical dispatch and real-time reporting of operation status, the effectiveness of multi-microgrid control can be improved [28]. The multi-microgrid architecture based on the multi-agent control strategy is shown in Figure 6.

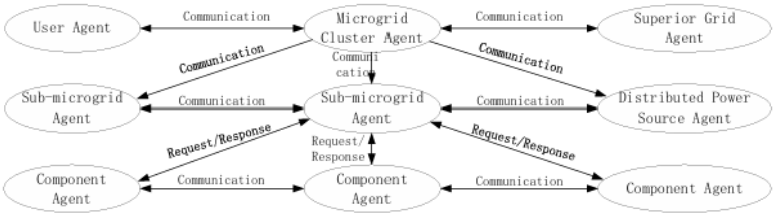

Figure 6. Multi-agent control strategy-based multi-microgrid architecture

Research on multi-microgrid system protection and system protection schemes have not yet reached the level of engineering application, and improvements to the multi-microgrid system structure, formulation of protection standards, and corresponding theories of distribution network protection based on practical feedback are still needed [29].

3. Operation and control technology of multi-microgrid systems

Considering the current status of distribution network technology, the user side is mostly passive, and no breakthroughs have been made in control protocols, communication technologies, access, and grouping control modes between the grid side and the user side [30].

3.1. Communication technology for multi-microgrid control

Multi-microgrids can be connected to the medium and low-voltage main grid centrally through a single point of common coupling (PCC) or distributedly through multiple PCCs, as shown in Figure

DOI: 10.54254/2755-2721/2025.BJ27296

7. To achieve optimal operation through multi-microgrid collaboration, each sub-grid can be in either a parallel or series relationship [31].

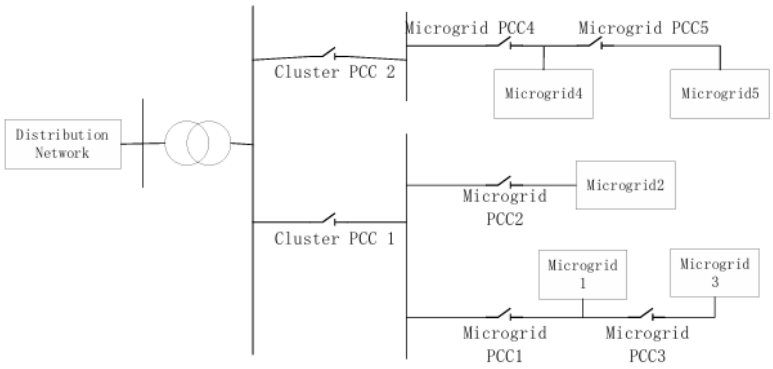

Figure 7. Multi-microgrid topology structure

For the logical communication of the microgrid control system, the following methods can be adopted: ① Direct information transmission, i.e., a point-to-point information exchange method; ② An indirect information transmission "middle platform" system, which stores all necessary information in the global database of the "middle platform". This method can realize mutual backup between multiple middle platforms, but there may be a certain time delay in the case of a large number of microgrids.

3.2. Strategies adopted by controllers in microgrids

The main adjustable components in a microgrid include the charging and discharging of energy storage systems, the power generation of PV systems, and the energy consumption power of adjustable loads [32].

In terms of energy storage control: The control of distributed power inverters is generally divided into two methods: power source control and voltage-frequency control [33].

In terms of PV power generation control: For dispatchable power control, we have classified adjustable loads and realized effective control of adjustable loads by directly cutting off loads through branch switches or adjusting power using frequency converters [34].

3.3. Multi-point control mode

As the core of multi-microgrid operation control, the energy management system integrates functions such as dispatch strategy formulation, power control, load management, and output control of distributed power sources and energy storage systems [35].

DOI: 10.54254/2755-2721/2025.BJ27296

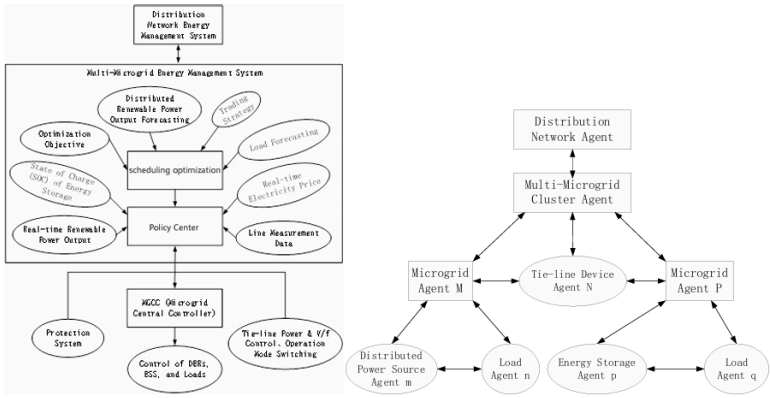

Figure 8. Energy management structure

As shown in Figure 8, multi-microgrid energy management can be divided into two categories: centralized and distributed. Centralized energy management relies on a multi-microgrid energy management system that formulates optimization strategies uniformly; distributed energy management mainly relies on management institutions (distribution network level, multi-microgrid level) to conduct operation management and decision-making through multiple agent systems, thereby realizing the stable operation of the multi-microgrid system [37].

The optimal dispatch of multi-microgrids is different from the single dispatch strategy of a single microgrid. It is necessary to comprehensively consider factors such as the output of distributed power sources and differences in load peak-valley characteristics among various microgrids, and introduce a mutual game mechanism between microgrids to formulate the optimal dispatch strategy for multi-microgrids [38]. An energy optimization model that considers power fluctuations at the point of common coupling should be constructed to address differences in the output of distributed power sources in the multi-microgrid system [39].

4. Interaction and control strategy logic of multi-microgrids

Currently, for the interaction strategies of multi-dimensional power grids, the main focuses are on the strategy for power stability or minimum fluctuation, the most economical strategy within a region, and the strategy for low carbon emissions or minimum carbon trading costs [40]. The current research mainly focuses on the cost per kilowatt-hour of PV and energy storage systems, which is evaluated through weighted accumulation [41]. The optimal strategy for carbon emission right trading costs can be used as a supplement to electric energy mutual aid, and its trading mechanism is not currently supervised by electric energy wall-separated trading and other regulations [42]. The carbon trading mechanism allows various producers to conduct carbon emission right trading on the carbon trading platform under the supervision of regulatory authorities, through the reasonable formulation of carbon emission rights for each subject [43].

4.1. Carbon trading mechanism model of microgrids

(1) The carbon emission right quota $E_{i,t}^{0}$ of microgrid i at time t is:

$$E_{i,t}^{0}=\varepsilon^{0}\left(P_{i,t}^{GT}+P_{i,t}^{RES}\right)$$

DOI: 10.54254/2755-2721/2025.BJ27296

In the formula: $P_{i,t}^{GT}$ is the power generation of the generator in microgrid i at time t; $P_{i,t}^{RES}$ is the power generation of the new energy unit in microgrid i at time t; ε^0 is the carbon emission right quota allocation coefficient.

(2) The actual carbon emissions $E_{i,t}^{CO_2}$ of microgrid i at time t is:

$$E_{i,t}^{CO_2}=\varepsilon^{CO_2}P_{i,t}^{GT}$$

In the formula: ε^{CO_2} is the carbon emission coefficient.

4.2. Autonomous economic optimization dispatch model of microgrids

A microgrid optimizes the allocation of its own resources according to the pricing strategy set by the market authority (MA). It purchases electricity from the outside when there is a power shortage and sells electricity to the outside when there is a power surplus. Each microgrid aims to minimize the operation cost, and the objective function is shown in Formula (3).

$$\min f_k=C_k^g+C_k^{ex}+C_k^{bat}$$

In the formula: f_k is the operation cost of microgrid k; C_k^g is the power generation cost of units in microgrid k; C_k^{ex} is the cost of interaction between microgrid k and the external grid; C_k^{bat} is the cost of battery participation in operation in microgrid k.

4.2.1. Power generation cost of units

Since wind and solar power generation belong to renewable clean energy, their operation process produces almost no operation cost. Only the fuel costs of diesel generators or gas-fired units in the microgrid are considered here, as shown in Formulas (4)–(6).

$$C_k^{MT}=\sum_{t=1}^{T}c_k^{gas}\frac{P_{k,t}^{MT}}{\eta_{MT}\times L_{HVNG}} \qquad C_k^{FC}=\sum_{t=1}^{T}c_k^{gas}\frac{P_{k,t}^{FC}}{\eta_{FC}\times L_{HVNG}}$$

$$C_k^g=C_k^{MT}+C_k^{FC}$$

In the formulas: c_k^{gas} is the fuel purchase price of microgrid k; $P_{k,t}^{MT}$ and $P_{k,t}^{FC}$ are the power generation of the micro-turbine (MT) and fuel cell (FC) in time period t, respectively; η_{MT} and η_{FC} are the power generation efficiencies of the diesel generator or gas-fired unit; L_{HVNG} is the lower heating value of diesel or natural gas; C_k^{MT} is the power generation cost of the MT; C_k^{FC} is the power generation cost of the FC.

DOI: 10.54254/2755-2721/2025.BJ27296

4.3. Constraint conditions

From the perspective of the power grid, a microgrid can be regarded as a virtual load with a range from negative to positive, where its electricity consumption and power generation can be seen as the increase and decrease of the virtual load. The cost of dispatching the microgrid by the power grid is:

$$F_{MG}=\sum_{t=1}^{T}\sum_{j\in n_{MG}}\left(\lambda_{j,t}P_{j,t}^{MG}\right)$$

In the formula: n_{MG} is the set of microgrids; $P_{j,t}^{MG}$ is the dispatched capacity of microgrid j in time period t; when $P_{j,t}^{MG}>0$, it is the active power output from microgrid j to the power grid in time period t; $\lambda_{j,t}$ is the electricity selling price of microgrid j to the power grid in time period t; when $P_{j,t}^{MG}<0$, it is the active power output from the power grid to microgrid j in time period t; $\lambda_{j,t}$ is the electricity purchase price of the power grid in time period t.

The dynamic constraint of microgrid output can be expressed as:

$$P_{jmin,t}^{MG}\le P_{j,t}^{MG}\le P_{jmax,t}^{MG}$$

The upper output limit $P_{jmax,t}^{MG}$ of microgrid j in time period t can be expressed as:

$$P_{jmax,t}^{MG}=\sum_{N\in n_{MT}}^{\Sigma}P_{jn,max}^{MT_{j,t}^{PV^{L}}{}_{j,t}}$$

In the formula: $E_{j,t}^{PV}$ and $E_{j,t}^{L}$ are the expected values of the PV system output forecast and self-load forecast of microgrid j in time period t, respectively; n_{MT} is the micro-turbine base load of microgrid j; $P_{jn,max}^{MT}$ is the maximum output of the micro-turbine.

The lower output limit $P_{jmin,t}^{MG}$ of microgrid j in time period t can be expressed as:

$$P_{jmin,t}^{MG}=\sum_{N\in n_{MT}}^{\Sigma}P_{jn,min}^{MT_{j,t}^{PV^{L}}{}_{j,t}}$$

In the formula: $P_{jn,min}^{MT}$ is the minimum output of the micro-turbine.

5. Future research prospects

For microgrid control, under the current background of high-proportion penetration of new energy, the contradiction between the main grid and the user side will become increasingly prominent. How to refine the construction of "energy network and control network" for multi-dimensional interaction

DOI: 10.54254/2755-2721/2025.BJ27296

on the energy consumption side are the two main research lines, and control strategies are important contents running through them [36].

At the energy network level, through research on grid-forming inverters, high-current discharge batteries, and hybrid energy storage batteries combining supercapacitors and chemical energy, the regulating capacity and flexibility of terminal microgrids have been significantly improved.

At the control network level, PV and energy storage systems already have regional-level regulating capacity, but if they cannot match the supply capacity of the distribution network, their regulation effect will be greatly reduced.

At the strategy level, how to realize grid-friendly interaction, smooth and stable load, controlled carbon emissions, and economical efficiency, and form valuable terminal new energy hardware investment, microgrid control strategies, and regulation strategies for regional multi-microgrids will also be one of the key research contents in the next stage.

6. Conclusion

This paper first summarizes the existing microgrid research. Existing microgrids mainly implement control at the terminal or conduct cluster control of PV and energy storage systems in a certain region, which can realize good interaction with the power grid to a certain extent. This paper elaborates on the structure of single microgrids, the structure of multi-microgrids, and their related communication and control modes, and introduces in depth the strategy functions based on the two dimensions of carbon emissions and economy. The next research and development direction should focus on the balance between support and economy. Research on terminal economic regulation, optimization of the effective local absorption rate of new energy, smooth grid interaction, and demand response will become the main technical issues and research directions in subsequent studies. This research will be of great significance to the realization of carbon peaking and carbon neutrality and the comprehensive development of electric power energy.

References

[1] Lu, Z. X., Wang, C. X., Min, Y., Zhou, S. X., Lv, J. X., & Wang, Y. B. (2007). A review of microgrid research. Automation of Electric Power Systems, (19).

[2] Cao, P., Wang, M., Guo, C. X., Bai, Y. H., & Zhou, H. J. (2012). Low-carbon comprehensive benefit analysis of intelligent microgrid operation. Power System Technology, (06).

[3] Ai, X., & Xu, J. J. (2013). Research on the coordinated operation mode of microgrid and distribution network based on interactive scheduling. Power System Protection and Control, (01).

[4] Yang, X. F., Su, J., Lv, Z. P., Liu, H. T., & Li, R. (2014). A survey of microgrid technologies. Proceedings of the CSEE, (01).

[5] Wang, Z., Chen, B., Wang, J., & Kim, J. (2016). Decentralized energy management system for networked microgrids in grid-connected and islanded modes. IEEE Transactions on Smart Grid, 7(2), 1097-1105. https: //doi.org/10.1109/TSG.2015.2427371

[6] Zhao, M., Chen, Y., Shen, C., & Huang, X. Q. (2015). Characteristic analysis and demonstration project design of microgrid cluster. Power System Technology, (06).

[7] Pei, W., Du, Y., Li, H. T., Yang, Y. H., Deng, W., & Qi, Z. P. (2015). New interconnection and interaction schemes and key technologies for large-scale access of microgrid clusters. High Voltage Engineering, (10).

[8] Li, X. L., Guo, L., Wang, C. S., & Li, Y. W. (2016). A review of key technologies for DC microgrids. Proceedings of the CSEE, (01).

[9] Xu, Y. T., & Ai, Q. (2016). Coordinated optimal scheduling method for active distribution networks with microgrids. Electric Power Automation Equipment, (11).

[10] Zhou, Y., & Ho, C. N. M. (2016). A review on microgrid architectures and control methods. In 2016 IEEE 8th International Power Electronics and Motion Control Conference (IPEMC-ECCE Asia) (pp. 3149-3156). Hefei. https: //doi.org/10.1109/IPEMC.2016.7512799

DOI: 10.54254/2755-2721/2025.BJ27296

[11] Kong, X. Y., Zeng, Y., Lu, N., Yan, J. H., & Hu, Q. A. (2017). Optimal operation method of microgrid based on multi-agent bidding equilibrium. Proceedings of the CSEE, (06).
[12] Xiong, X., Wang, J. B., Jing, T. J., Yang, R. G., & Ye, L. (2017). Power optimization control of microgrid cluster. Electric Power Automation Equipment, (09).
[13] Ren, S. J., Yang, X. D., Zhang, Y. B., Zhao, B., Xie, L. Y., & Weng, G. Q. (2017). Real-time control strategy for optimal operation of microgrids based on dispatchability in uncertainty environments. Proceedings of the CSEE, (23).
[14] Pan, C., Teng, H., Gong, Y. B., Liao, M. F., & Pan, M. N. (2019). Research on optimal coordination scheduling strategy of microgrid under user-side interaction mode. Electrical Measurement & Instrumentation, (05).
[15] Gu, H. S., Li, X. L., Guo, L., & Li, P. F. (2020). Flexible interconnection and control of multi-DC microgrid clusters. Proceedings of the CSU-EPSA, (04).
[16] He, H., Lei, X., Huang, T., & He, J. Y. (2019). Coordinated autonomous optimal operation strategy of multi-microgrid system under price guidance. Power System Protection and Control, (16).
[17] Qi, J., Sun, S., Li, J. P., Li, Y. J., Yang, Z. G., & Hou, Y. H. (2020). Automatic power balance control strategy for wind-storage AC microgrid. Smart Power, (01).
[18] Ding, L., Han, Q. L., & Zhang, X. M. (2019). Distributed secondary control for active power sharing and frequency regulation in islanded microgrids using an event-triggered communication mechanism. IEEE Transactions on Industrial Informatics, 15(7), 3910-3922. https: //doi.org/10.1109/TII.2018.2884494
[19] Lei, Q., Si, Y., & Liu, Y. (2018). Energy storage system control strategy to minimize the voltage and frequency fluctuation in the microgrid. In 2018 IEEE Applied Power Electronics Conference and Exposition (APEC) (pp. 1500-1505). San Antonio, TX, USA. https: //doi.org/10.1109/APEC.2018.8341215
[20] Liu, C., Zhuo, J. K., Zhao, D. M., Li, S. Q., Chen, J. S., Wang, J. X., & Yao, Q. (2020). A review of research on flexible and safe operation of renewable energy microgrids using energy storage systems. Proceedings of the CSEE, (01).
[21] Li, T. H., Zhou, Y., Zhang, J., Lv, X., & Ma, G. (2020). Cooperative control of distributed generation in microgrid based on power spring. Guangdong Electric Power, (01).
[22] Ding, Y. J. (2020). Research on microgrid model and its optimal operation simulation based on renewable energy and energy storage system. Journal of Electrical Engineering, (01).
[23] Zhang, Q. J., Zhuang, X. Z., Liu, Y. C., & Wang, C. (2020). Autonomous current sharing control strategy for multi-source parallel connection in DC microgrid. Power System Technology, (03).
[24] Wang, L., Ding, G., Zhang, Y., Wang, Z., Han, K., & Li, G. (2019). Distributed optimal scheduling of virtual power plants with multi-microgrid. In 2019 Chinese Control And Decision Conference (CCDC) (pp. 4220-4224). Nanchang, China. https: //doi.org/10.1109/CCDC.2019.8832972
[25] Wang, M. H., & Li, F. X. (2020). Research on control strategy of hybrid energy storage for suppressing power fluctuation in microgrid. Power Capacitors & Reactive Power Compensation, (04).
[26] Su, L., Li, Z., Zhang, Z., Du, Y., Ge, X., & Yang, X. (2020). An energy management strategy for multi-energy microgrid clusters based on distributionally robust optimization. In 2020 International Conference on Smart Grids and Energy Systems (SGES) (pp. 718-723). Perth, Australia. https: //doi.org/10.1109/SGES51519.2020.00133
[27] Li, Q., Pu, Y. C., Han, Y., & Chen, W. R. (2020). Hierarchical energy management of electric-hydrogen islanded DC microgrid. Journal of Southwest Jiaotong University, (05).
[28] Zhu, X. R., & Meng, X. X. (2020). Stability analysis and active damping control of DC microgrid. High Voltage Engineering, (05).
[29] Wang, Q. Q., Zeng, J., Liu, J. F., Chen, J. L., & Wang, Z. G. (2020). Research on distributed multi-objective optimization algorithm for source-storage-load interaction in microgrid. Proceedings of the CSEE, (05).
[30] Yang, Q. Z., Jiang, W., & Xu, C. L. (2020). Design and hierarchical control of monitoring system for AC-DC hybrid microgrid based on multi-agent. High Voltage Engineering, (07).
[31] Mi, Y., Song, G. X., Song, Y. Y., Yuan, M. H., Fu, Y., & Wang, C. S. (2020). Multi-level power management strategy for islanded AC-DC hybrid microgrid cluster. Automation of Electric Power Systems, (07).
[32] Liu, Z., Yang, C., Jiang, W., Li, P. P., Yang, B., & Liang, M. (2020). Power allocation technology of energy storage system in DC microgrid based on consensus algorithm. Automation of Electric Power Systems, (07).
[33] Bie, C. H., Lin, C. F., Li, G. F., & Qiu, A. C. (2020). Development and prospect of resilient power systems under energy transition. Proceedings of the CSEE, (09).
[34] Sang, B., Zhang, T., Liu, Y. J., Chen, Y. D., Liu, L. S., & Wang, R. (2020). A review of energy management systems for multi-microgrids. Proceedings of the CSEE, (10).
[35] Zhao, X. K. (2020). Microgrid power automatic control strategy based on particle swarm optimization algorithm. Information Technology, (11).

DOI: 10.54254/2755-2721/2025.BJ27296

[36] Wu, W. P., Cui, Y., & Yan, X. W. (2020). Parallel operation strategy of distributed microgrid self-synchronizing voltage source. Power System Protection and Control, (12).
[37] Liu, Y., Lei, Y. K., & Pan, H. B. (2020). An equalization control strategy for DC microgrid without bus voltage deviation. Power System Protection and Control, (12).
[38] Hao, F., Yuan, Z., Yuan, Z. B., Zhuang, H. D., & Shi, Y. (2020). Research and practice on steady-state power control strategy of off-grid microgrid. Power System Protection and Control, (22).
[39] Mao, Y. Z., He, B. N., Wang, D. S., Jiang, R. Z., Zhou, Y. Y., Zhang, J. R., He, X. M., & Dong, Y. C. (2021). Optimal control method of intelligent microgrid cluster based on improved deep reinforcement learning. Smart Power, (03).
[40] Wu, X. M., Guo, Y., Zheng, J. W., & Ling, Z. X. (2022). Optimal operation method of energy system in multi-energy complementary smart park. High Voltage Engineering, (07).
[41] Zhao, J., Zhang, M., Zhang, S. F., & Yang, Q. (2023). Optimal cooperative operation strategy of multi-microgrids considering carbon trading and renewable energy uncertainty. Electric Power, (05).
[42] Chen, X., Fu, W. L., Zhang, H. R., Zhang, Y. N., Wang, R. M., & Li, J. Y. (2024). Research on optimal scheduling strategy of shared energy storage for microgrid cluster considering uncertainty of new energy generation. Power System Technology, (01).
[43] Alzahrani, A., Selvamathi, R., Indragandhi, V., & Kumar, L. A. (2024, March 26). An effective controller with improved voltage and frequency stability for microgrid in an autonomous mode. AIP Conference Proceedings, 2966(1), 040021. https: //doi.org/10.1063/5.0189820