Proceedings of CONF-MSS 2025 Symposium: Machine Vision System
DOI: 10.54254/2755-2721/2025.CH24662

Research on Key Technologies and Performance Optimization Strategies for Active Power Filters

Minli Huang

Department of Microelectronics, University of Science and Technology of China, Hefei, China
huangminli@mail.ustc.edu.cn

Abstract. With the development of power technology, the issue of harmonic mitigation has become increasingly severe. As an efficient harmonic mitigation device, the Active Power Filter (APF) is instrumental in enhancing power quality. This paper conducts an in-depth investigation into the key technologies of APF, including harmonic detection techniques and current control techniques, by leveraging literature resources. Through analyzing data such as the quantity of relevant literatures since 2018, this study derives the development trends of harmonic detection technologies in recent years. Subsequently, the paper examines factors affecting APF performance, such as time delays, time lags, and random disturbances, and enumerates strategies proposed by numerous researchers to address these impacts. At the end of this paper, the research achievements are summarized, the existing problems are analyzed, and the future development trends of APF are prospected.

Keywords: Active Power Filter (APF), harmonic detection technology, current control technology, performance influence factors, countermeasures

1.Introduction

In modern society, electricity, as an indispensable energy source, supports the operation of all industries. However, with the rapid development of power electronics technology, a large number of nonlinear loads are widely connected to the power system, leading to a more serious problem of harmonic pollution. During operation, these nonlinear loads inject a large amount of harmonic current into the power grid, distorting the voltage and current waveforms. The harm of harmonics to the power system is multi-faceted. Harmonics will increase the losses of power equipment, interfere with the relay protection devices of the power system, and generate electromagnetic interference to the communication system. Taking the transformer as an example, harmonic currents will significantly increase the core loss and winding copper loss of the transformer [1], causing severe heating of the transformer, accelerating insulation aging, and shortening its normal operation time.

The Active Power Filter (APF), as a device capable of detecting and compensating for harmonic currents in real-time, plays an irreplaceable key role in reducing harmonic pollution and improving power quality. APF injects a compensation current into the power grid, which is equal in magnitude and opposite in direction to the harmonic current, effectively canceling out the harmonic current, restoring the grid current to a sine wave, and ensuring the safe, stable, and efficient operation of the

© 2025 The Authors. This is an open access article distributed under the terms of the Creative Commons Attribution License 4.0 (https://creativecommons.org/licenses/by/4.0/).

DOI: 10.54254/2755-2721/2025.CH24662

power system. Figure 1 shows the logic circuit diagram of a three-phase three-wire shunt APF widely used in industry.

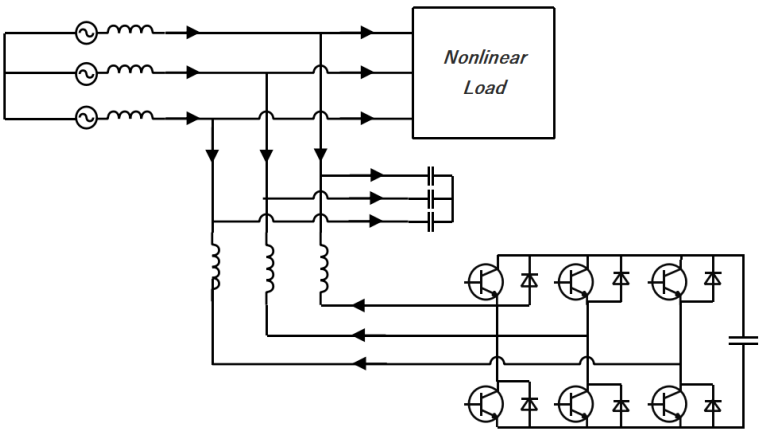

Figure 1: logic circuit diagram of a three-phase three-wire shunt APF

In the field of APF, although many research achievements have been made, there are still some bottleneck problems to be solved. On the one hand, in a complex power grid environment, it is difficult to balance the accuracy and real-time performance of harmonic detection. When there are harmonics of various frequencies, voltage fluctuations, and sudden load changes in the grid, existing harmonic detection algorithms often cannot accurately and quickly detect harmonic components, resulting in a significant reduction in the compensation effect of APF. On the other hand, in terms of current control, how to ensure the rapid response of APF to load changes, achieve high-precision current tracking, and improve its stability under different working conditions remains a research difficulty.

This paper aims to study the key technologies of APF, analyze the factors affecting its performance, and propose feasible countermeasures to break through the current bottleneck of APF technology, provide theoretical support and technical guidance for the application of APF in a wider range of fields, further promote the development of harmonic mitigation technology in the power system, improve power quality, and ensure the safe and stable operation of the power system.

2.Research on key technologies of modern APF

2.1.Harmonic detection technology

Harmonic detection technology [2] is a key means for accurately identifying and quantifying harmonic components in the power system. It mainly uses methods such as Fourier transform, instantaneous reactive power theory, and adaptive filtering to extract harmonic features from electrical signals, providing a key basis for the APF harmonic mitigation device.

Fourier transform is a very commonly used mathematical tool and a compulsory course for all information and electronics majors in universities. Through Fourier transform, a time-domain signal can be converted into a frequency-domain signal. In the harmonic detection of APF, the method based on Fourier transform is extremely widely applied. This method decomposes the load current signal into sine and cosine components of different frequencies through Discrete Fourier Transform (DFT) or Fast Fourier Transform (FFT) [3], so as to obtain the frequency and amplitude information of harmonics. In a steady-state situation, this method can relatively accurately detect the content of

DOI: 10.54254/2755-2721/2025.CH24662

each harmonic. However, since Fourier transform requires sampling and calculation of a complete signal cycle, it has a high requirement for the periodicity of the signal. When the grid frequency fluctuates or the load changes suddenly, such situations will result in large errors in the detection results, and there is a certain delay in the detection [2,4], which is difficult to meet the real-time requirement of APF. For example, in the case of large grid voltage fluctuations, the harmonic detection method based on Fourier transform may misjudge the signal changes caused by voltage fluctuations as harmonics, resulting in inaccurate compensation of APF.

Another harmonic detection method is based on the instantaneous reactive power theory. This method is an effective way to detect harmonics and reactive power in a three-phase circuit. Based on the definition of instantaneous power in a three-phase circuit, this theory can quickly and accurately separate the harmonic current and reactive current through the operation of the instantaneous values of the three-phase voltage and current. Wang et al[5]. combined the instantaneous reactive power theory with the FBD detection method, improved the traditional FBD harmonic detection algorithm, realized the voltage balance control of the upper and lower capacitors of the three-phase four-wire capacitor-split APF, and replaced the low-pass filter, avoiding the hysteresis error generated during the sampling and calculation process of the low-pass filter, thus improving the detection accuracy of harmonics. The harmonic detection method based on the instantaneous reactive power theory has the advantages of good real-time performance and high detection accuracy, and can quickly track the changes of the load current. However, this method has a high requirement for the symmetry of the three-phase circuit. When the three-phase voltage or current is unbalanced, it will lead to errors in the detection results.

Adaptive filtering is a technology that can automatically adjust the parameters of the filter according to the statistical characteristics of the input signal. In the harmonic detection of APF, the adaptive filter can adjust the weight coefficients of the filter in real-time according to the changes of the grid current and the reference signal, so as to accurately detect the harmonic current. Song et al [6]. analyzed the performance of different structure adaptive filtering algorithms using adaptive filtering technology and proposed a new fractional tap algorithm for adaptive filtering calculation. This harmonic detection method has good tracking performance and anti-interference ability, and can adapt to the changes of grid parameters and the dynamic characteristics of the load. However, the computational complexity of this method is high, and it requires high hardware resource support in practical applications.

Table 1: Comparison of harmonic detection methods

Technology	Core Principle	Advantages	Disadvantages	Applications
Fourier Transform	Time-domain to frequency-domain conversion via DFT/FFT	High steady-state accuracy	Slow dynamics, sensitive to frequency drift	Steady grids, low-frequency harmonics
Instantaneous Reactive Power	Three-phase instantaneous power decomposition	Fast real-time response	Requires three-phase symmetry	Industrial variable-frequency systems
Adaptive Filtering	Real-time parameter adjustment via LMS/RLS	Strong anti-interference, adaptive to dynamics	High computational cost, hardware-intensive	Complex grids, high-frequency harmonics

DOI: 10.54254/2755-2721/2025.CH24662

2.2.Current control technology

Current control technology is an important means to achieve precise control of current. Through specific algorithms and strategies, such as Proportional-Integral (PI) control, hysteresis current control, predictive current control, etc., according to the deviation between the desired current and the actual current, control signals are generated to adjust the output current of the device, ensuring the stable operation of the system and the power quality.

PI control is a classic control strategy and is widely applied in the current control of APF. The PI controller outputs control signals through proportional and integral operations on the error signal to regulate the output current of APF. Cao et al [7]. proposed a composite control method based on a digital PI controller and a digital repetitive controller to improve the problem of poor performance when the current loop of the three-phase three-wire shunt Active Power Filter (SAPF) uses a digital PI controller alone for compensation. They analyzed and deduced the relevant design method, compensation performance, stability judgment, and robustness in detail. Through simulation and experimental verification, this method can achieve low steady-state error and fast dynamic response. PI control has a simple structure and is easy to implement. In a steady-state situation, it can effectively eliminate errors, enabling the output current of APF to track the desired current. However, due to the slow dynamic response speed of PI control, when the load current changes suddenly, it takes a long time for the output current to reach a stable value.

Hysteresis current control is a current control method based on a comparator. In APF, the hysteresis current controller compares the desired current with the actual current. When the actual current deviates from the desired current beyond a certain hysteresis width, the controller outputs a specific signal to make the power switching devices of APF act, adjusting the output current. Scholar Zeng Jiang, in his presided over Young Scientists Fund project "Research on Key Technologies of Hysteresis Current Control of Active Filters", conducted a theoretical study on the internal relationship between the hysteresis current control method based on the optimal voltage vector and the optimal Space Vector Pulse Width Modulation (SVPWM). He introduced phase sequence transformation and carried out phase control on the three-phase switches. For the first time, he realized fixed-frequency hysteresis control using the optimal voltage vector, which can make full use of the control freedom, optimize the selection of the switching action with the minimum loss, and achieve the fixed-frequency hysteresis current control of the active filter with the lowest loss. The experimental results show that the hysteresis current control method can greatly reduce the switching loss of the active filter and improve its reliability. However, traditional hysteresis current control has problems such as an unfixed switching frequency and large electromagnetic interference. If the hysteresis width is too large, although the switching loss can be reduced, the current tracking accuracy will decrease; if the hysteresis width is too small, the switching frequency and switching loss will increase.

Predictive current control is a control strategy based on a mathematical prediction model. Generally, this method establishes a mathematical model of APF, predicts the output current at the next moment, and calculates the control signal at the current moment according to the prediction result and the desired current. Liu et al [8]. , based on the analysis of the main circuit topology of the three-level three-phase four-leg active power filter, established its mathematical model and proposed to apply the predictive current control strategy to control it. They used the state information at the current sampling moment to predict the compensation current in the next sampling period and calculated and determined the compensation current required for generating the turn-on/off pulses of each switching device of the three-level four-leg APF to achieve the purpose of tracking the command current. The experimental results show that using this control strategy can effectively

DOI: 10.54254/2755-2721/2025.CH24662

compensate the three-phase harmonic current and neutral current of the system, and can well control the balance of the voltages of the two capacitors on the DC side, which has a good application prospect in the three-phase four-wire system. However, this method has a high requirement for the accuracy of the system model, a large amount of calculation, and requires the support of a high-performance processor. Once there is an error in the system model, it will affect the control effect.

Table 2: Comparison of current control strategies

Technology	Core Principle	Advantages	Disadvantages	Applications
PI Control	Proportional-integral error correction	Simple structure, low steady-state error	Slow dynamic response	Low-speed response scenarios
Hysteresis Current Control	Hysteresis comparator-based switching	Fast transient response	Unstable switching frequency, EMI issues	Medium/low-power APF, real-time systems
Predictive Current Control	Mathematical model-based future current prediction	High control precision, optimal dynamics	Model-dependent, heavy computation	High-power three-phase four-wire systems

3.Research trends of different harmonic detection technologies this year

Table 3 records the number of literatures on harmonic detection technologies published on CNKI every one-year interval from 2018 to 2024, which can directly reflect the changing trend of research popularity. The chart shows that the adaptive filtering and instantaneous reactive power methods have witnessed significant growth, while the research based on Fourier transform has declined. It is evident that the current research hotspots have changed significantly, and this phenomenon may be related to the development of research technologies.

Table 3: Annual publication trends of harmonic detection methods (2018-2024)

year	Fourier Transform	Instantaneous Reactive Power	Adaptive Filtering	Total
2018	45	32	28	105
2020	38	40(+37.5%)	35 (+25%)	113
2022	30	55 (+37.5%)	50(+42.9%)	135
2024	25	68 (+23.6%)	65 (+30%)	158

4.Factors affecting the performance of APF and countermeasures

4.1.Influence of time delay and time lag and countermeasures

During the operation of APF, the time delay and time lag [9] mainly come from the harmonic detection link and the current control link. In terms of harmonic detection, whether it is the detection method based on Fourier transform, instantaneous reactive power theory, or adaptive filtering, it takes a certain amount of time to process the signal, resulting in a time delay in the detection results. In the method based on Fourier transform, it is necessary to collect data of a complete signal cycle for calculation, which will inevitably bring a large time delay. Similarly, in terms of current control, there is also a certain time lag from the controller sending the control signal to the action of the power switching devices.

DOI: 10.54254/2755-2721/2025.CH24662

These time delays and time lags will have a serious impact on the performance of APF. Since the generation of the compensation current depends on the result of harmonic detection, the time delay will cause a phase deviation between the compensation current and the actual harmonic current. When the phase deviation is large, the compensation current not only cannot effectively cancel out the harmonic current but may even exacerbate the harmonic pollution. For example, in the case of a grid frequency of 50 Hz, if the harmonic detection time delay is 10 ms, for the 5th harmonic (with a frequency of 250 Hz), the phase deviation will reach 90°. At this time, the compensation current and the harmonic current are superimposed on each other, which will further increase the harmonic content in the power grid. At the same time, the time delay and time lag will also reduce the dynamic response speed of APF. When the load current changes suddenly, APF cannot adjust the compensation current in time, resulting in the deterioration of power quality.

To mitigate the impact of the above-mentioned time delays and lags on APF performance, numerous improvements have been proposed by researchers. Zhang et al. [10] addressed the control delay issue in APF by establishing a full-process delay model incorporating sampling delay, computational delay, and PWM output delay. By equivalence, the influence of delays was modeled as a phase-lag component in the system's closed-loop transfer function. The study proposed a Smith predictor-based compensation method, which effectively counteracts the phase lag caused by delays through introducing the predictor into the APF control loop. This approach enhances the system's dynamic response to sudden load changes, with experimental results showing a ~30% reduction in system adjustment time after compensation.. Wang et al. [11] focused on the delay stability of shunt APF by constructing a state-space equation with time-lag terms. Using the Lyapunov-Razumikhin theorem, they derived sufficient conditions for the system's asymptotic stability, revealing the quantitative relationship between time delays and system pole distribution. The team further generated time-delay-gain stability region plots through numerical simulations, providing visual guidance for optimizing PI controller parameters in engineering practices based on actual delay levels.

4.2.Influence of random interference and countermeasures

In addition to the influence of time delay and time lag, there are also various random interferences [9] in the power system, such as the fluctuation of grid voltage, lightning strikes, electromagnetic radiation, etc. These random interferences will have a multi-faceted impact on the performance of APF. In the harmonic detection link, random interferences may distort the detection signal, leading to inaccurate harmonic detection results. For example, the instantaneous fluctuation of the grid voltage may be misjudged as a harmonic, so that APF generates an incorrect compensation current. In the current control link, random interferences will affect the stability of the controller, causing the output current of APF to fluctuate and unable to accurately track the desired current. Especially in some occasions with extremely high requirements for power quality, such as medical equipment and precision instrument manufacturing, random interferences may cause the equipment to fail to work properly.

In order to improve the anti-interference ability of APF in a random interference environment and enhance its operation stability and compensation accuracy, many scholars have adopted different methods to weaken or eliminate random interferences. Zhao et al. [12] proposed a harmonic current detection method based on adaptive noise cancellation, which constructs a dual-loop feedback structure to treat grid background harmonics and measurement noise as cancelable disturbances. By utilizing the recursive least squares algorithm to update the cancellation filter coefficients online, this method reduces the detection error of the 5th harmonic by 42% compared with the traditional

DOI: 10.54254/2755-2721/2025.CH24662

instantaneous reactive power method under three-phase unbalance and frequency fluctuation scenarios, and shortens the dynamic response time to within 10 ms. This effectively enhances the robustness of harmonic detection in complex working conditions.Sun et al. [13] introduced active disturbance rejection control technology into shunt hybrid APF and designed a composite controller comprising an extended state observer (ESO) and a nonlinear tracking differentiator. This scheme uses ESO to estimate and compensate for uncertain factors such as system model mismatch and grid disturbances in real time, limiting the current tracking error of APF to within 5% during sudden load current changes while reducing the DC-side voltage fluctuation amplitude by 60%. This significantly enhances the system's ability to suppress random disturbances. Chen et al. [14] constructed an intelligent harmonic detection model based on a deep belief network, which optimizes network parameters through unsupervised pre-training and supervised fine-tuning to achieve feature extraction for complex distorted signals containing interharmonics and subharmonics. Experimental results show that the model maintains a harmonic detection accuracy of over 95% in low-signal-to-noise-ratio scenarios and achieves a 3-fold improvement in convergence speed compared with traditional artificial neural network (ANN) methods, providing a new pathway for adaptive harmonic governance of APF in smart distribution networks.

5.Research summary and prospect

This paper has carried out an in-depth study on APF. Based on numerous industry literatures, it systematically analyzes the key technologies of APF, such as harmonic detection and current control technologies, and elaborates in detail the influence of different technologies on the performance of APF. By analyzing the factors affecting the performance of APF, including time delay, time lag, and random interference, corresponding improvement strategies such as optimizing the detection algorithm and improving the control strategy are proposed.

Although APF has achieved remarkable results in the field of harmonic mitigation, there are still some problems to be solved. The most immediate and practical problem is that the cost of APF is relatively high, which limits its wide application in some cost-sensitive fields. The manufacturing of APF requires a large number of power electronic devices and high-performance control chips, and these hardware costs and R & D costs are finally transferred to the product price. Secondly, in a complex power grid environment, the performance of APF still needs to be further improved. When there are multiple types of harmonics, voltage unbalance, and random interferences in the power grid at the same time, the existing harmonic detection and control algorithms are difficult to balance the detection accuracy, response speed, and stability.

Based on the current professional knowledge and understanding of the industry development, the research of APF can potentially break through in the following aspects. In terms of hardware, attempts can be made to explore more cost-effective device selection schemes. For example, research can be conducted on how to optimize the combined application of traditional silicon-based devices. On the premise of ensuring performance, the cost can be reduced. At the same time, through the modular design idea, the hardware structure of APF can be split. This is not only convenient for production and assembly but also reduces the difficulty of later maintenance. In terms of software algorithms, the basic algorithms learned in class can be improved and combined. For example, combining a simple fuzzy control algorithm with the traditional PI control may, to a certain extent, improve the adaptability of APF to complex power grid environments. In addition, try to use programming languages such as Python to build a simple simulation platform, simulate different power grid working conditions, test and optimize various intelligent algorithms, and screen out the most suitable algorithm combination for the operation of APF. Although these ideas are still in their

DOI: 10.54254/2755-2721/2025.CH24662

infancy, it is anticipated that through continuous learning and practice, they will be able to make a contribution to the research of APF technology.

References

[1] Fan, R. L. and Bao, M. (2022). Current Situation and Development of Control Technology of Active Power Filter. Electronic Quality, (09), 4-7.
[2] Liu, F. X. Wu, H. L., and Yang, L. (2024). Research on Harmonic Compensation Characteristics of Shunt Active Power Filter. Shanghai Electric Technology, 17(04), 79-81.
[3] Xu, S. S., Tan, Y. and Guo, W. (1999). Signal and System: Theory, Method and Application. Hefei: University of Science and Technology of China Press, 178-190.
[4] Li, H. (2024). Research on the Influence of Time Delay of Hybrid Active Power Filter on Harmonic Compensation and Improvement Measures. Power Equipment Management, (20), 200-202.
[5] Wang, W. W. (2017). Research and Design of Three-phase Four-wire Active Power Filter [Dissertation]. Shandong University of Science and Technology.
[6] Song, X. W. (2019). Overview of Research on Structure Adaptive Filtering Technology. Electronic Measurement Technology, 42(18), 101-105.
[7] Cao, X. D., Zhang, R. G., Wei, X. L. and Yu, M. (2024). A Compound Control Technology for The Current Loop of Shunt Active Power Filters. 2024 IEEE 4th International Conference on Digital Twins and Parallel Intelligence (DTPI). Retrieved from https: //ieeexplore.ieee.org/document/10778678
[8] Liu, Y., Zhang, X. and Wang, X. (2021). Predictive Current Control Strategy for Three-Level Four-Leg Active Power Filter Based on Model Predictive Control. IEEE Access, 9, 11556-11568.
[9] Li, Z., Chen, Z., and Li, X. (2022). Robust Control Strategy of Active Power Filter Considering Time-Delay and Stochastic Disturbance. Journal of Power Electronics, 22(5), 2211-2222.
[10] Zhang, Q., Liu, Y. and Li, H. (2021). Research on Control Time-Delay of Active Power Filters. Electric Power Automation Equipment, 41(7), 125-131.
[11] Wang, H., Zhao, Y. and Wang, Y. (2020). Influence of Time-Delay on the Stability and Performance of Shunt Active Power Filters. International Journal of Electrical Power & Energy Systems, 119, 105797.
[12] Zhao, X., Liu, J. and Wang, Y. (2023). Harmonic Current Detection of Active Power Filter Based on Adaptive Detection Method. IEEE Transactions on Power Electronics, 38(4), 4647-4658.
[13] Sun, Y., Wang, X., Li, Z. (2022). Active Disturbance Rejection Control for Shunt Hybrid Active Power Filters. IEEE Transactions on Industrial Electronics, 69(11), 11899-11909.
[14] Chen, Y., Zhang, L. and Wu, X. (2020). Research on Intelligent Active Power Filtering Technology Using Artificial Neural Network. Neural Computing and Applications, 32(18), 14647-14659.