Proceedings of CONF-FMCE 2025 Symposium: Semantic Communication for Media Compression and Transmission
DOI: 10.54254/2755-2721/2025.GL24391

ZP-BAPS: Z-Score Regularized Real-Time Pruning for Energy-Efficient Power Amplifier Linearization

Haochen Wang

College of Physics, Chongqing University, Chongqing, China
19313608525@163.com

Abstract. The rapid deployment of 5G/B5G networks necessitates power-efficient solutions for linearizing compact power amplifiers (PAs) in micro-cell base stations. Conventional Basis-Propagating Selection (BAPS) models face challenges including candidate explosion, collinearity, and diminishing contributions of basis functions. This paper proposes the Z-score Pruned BAPS (ZP-BAPS) model, a dual-strategy enhancement framework that integrates statistical significance validation with dynamic basis pruning to optimize digital pre-distortion (DPD). By embedding Z-score hypothesis testing into the greedy basis selection process, the framework systematically evaluates and eliminates statistically insignificant basis functions while preserving structural integrity through leaf-node prioritization. Experimental validation on a 6W GaN Class AB PA demonstrates that ZP-BAPS achieves significant performance improvements under computational complexity constraints (243 FLOPS): compared to conventional BAPS, it reduces normalized mean square error (NMSE) by 0.44 dB and adjacent channel power ratio (ACPR) by 0.71 dB for 64QAM-OFDM signals. Furthermore, it outperforms the DOMP model by 1.03 dB in NMSE and 1.14 dB in ACPR. Hardware implementation on FPGA confirms real-time feasibility with deterministic latency below 1.2 μs. The proposed method establishes a statistically regularized paradigm for energy-constrained DPD, addressing the efficiency-accuracy tradeoff in low-power 5G deployments.

Keywords: Digital predistortion, Power amplifier linearization, Basis function pruning, Z-score validation

1. Introduction

With the transformation of 5G networks towards high-density and highly flexible deployment, micro base stations are increasingly becoming one of its key technologies. Micro base stations are designed to deliver services efficiently while maintaining low power consumption. Its characteristic of low-power operation reduces the power consumption budget of the digital pre-distorter. Therefore, how to find a concise and accurate power amplifier behavior model to efficiently achieve pre-distortion linearization has become a key issue.[1]

To address these critical challenges in power amplifier modeling, this paper proposes a dual-strategy enhancement framework that synergistically combines statistical significance evaluation with dynamic model pruning. Recognizing the inherent limitations of conventional BAPS(Basis-Propagating Selection) models in candidate explosion and collinearity management, our solution embeds statistical hypothesis testing into the basis function selection process. Specifically, we

© 2025 The Authors. This is an open access article distributed under the terms of the Creative Commons Attribution License 4.0 (https://creativecommons.org/licenses/by/4.0/).

DOI: 10.54254/2755-2721/2025.GL24391

introduce Z-score validation as a quantitative metric to evaluate the statistical significance of each basis function's contribution, enabling data-driven identification of redundant components. Concurrently, a dynamic pruning mechanism is developed to iteratively eliminate insignificant basis functions during model evolution, thereby maintaining computational efficiency while preserving modeling accuracy. This co-design approach fundamentally transforms the basis function selection paradigm from pure error minimization to a statistically regularized optimization process. The proposed architecture is further reinforced by incorporating leaf-node prioritization in pruning operations, which strategically preserves structural integrity of the basis function tree while reducing model complexity. Through systematic integration of statistical learning principles with adaptive basis propagation, the developed ZP-BAPS model establishes a new equilibrium between computational efficiency and linearization performance in low-power digital pre-distortion scenarios.

This paper first introduces the application of the base propagation selection model in reducing complexity. Subsequently, the limitations of the model were analyzed, and the Z-score was introduced as the evaluation criterion of the basis functions. During the model training process, the basis functions were dynamically selected to optimize the composition of the basis functions in the model. Furthermore, this paper also conducts simulation verification of the new model based on the actual power amplifier, proving the validity of the new model.

2. BAPS (Basis-Propagating Selection) Model

Unlike predefined model structures such as MP and GMP, the BAPS model takes the input signal as the starting point and extends the existing basis functions in the model. Meanwhile, a Greedy Search Algorithm is introduced, which can adaptively search for the local optimal basis function[2][3].

The BAPS model defines two basic operations for generating new basis functions, which are: delayed operations (Type I) and nonlinear operations (Type II).

Type I delayed operation can be expressed as:

$$Type\ \mathrm{I}:\ \phi^{(r)}(n) = \phi^{(i)}(n-m) \tag{1}$$

where $\phi^{(i)}(n)$ represents the basis function generated in the i-th iteration, $\phi^{(r)}(n)$ denotes the newly generated basis function with i<r, and m indicates the memory depth.

Type II nonlinear operations can be expressed as:

$$Type\ II:\ \phi^{(r)}(n) = \phi^{(i)}(n)\phi^{(j)}(n)\left(\phi^{(k)}(n)\right)^{*} \tag{2}$$

where $i, j, k < r$ .Through these two types of operations, any finite-order Volterra basis function can be generated.

Define the initial basis function as: $\phi^{(1)}(n) = x(n)$ .Starting from this foundation, each iteration generates new candidate basis functions through Type I and II operations, selecting one candidate to incorporate into the BAPS model. The detailed implementation of this Greedy Basis Function Search Algorithm is described below.

Greedy Basis Search Algorithm:

1 Arrange the basis functions in the BAPS model in vector form and define them as $\boldsymbol{X}(n)$ .Initially, the model contains a single basis function: $\boldsymbol{X}(n) \leftarrow [\phi^{(1)}(n)]$

2 Perform Type I and II operations on the existing r−1 basis functions at the beginning of the r-th iteration to generate candidate basis functions.

DOI: 10.54254/2755-2721/2025.GL24391

3 Denote the l-th candidate basis function as $\varphi_l(n)$ and construct new behavioral models by concatenating each candidate with $\boldsymbol{X}(n)$. The l-th concatenated model is constructed as $[\boldsymbol{X}(n),\ \varphi_l(n)]$.

4 Evaluate model performance using Mean Squared Error (MSE)

$$MSE\,(l) = \underset{\boldsymbol{w}}{min}\frac{1}{N}\sum_{n=0}^{N-1}|z_d\,(n) - [\boldsymbol{X}\,(n),\ \varphi_l\,(n)]\boldsymbol{w}|^2 \tag{3}$$

where $z_d(n)$ denotes the ideal pre-distorted output signal, $\boldsymbol{w} = [w_1, \cdots w_r]$ represents the model coefficient vector, N is the total number of training samples.

5 Select the optimal candidate basis function: $\phi^{(r)}\,(n) \leftarrow \varphi_{l_{\min}}(n)$, $l_{\min} = \arg\min_{l} MSE(l)$, and update the basis function vector: $\boldsymbol{X}(n) \leftarrow [\boldsymbol{X}(n),\ \phi^{(r)}(n)]$.

Algorithm 1: Greedy Basis Search Algorithm

Input: iterations$R$,input signal $x(n)$,ideal pre-distorted output signal $z_d(n)$,type I memory depth m ;

Output: BAPS basis function vector $\boldsymbol{X}(n)$;

1 Initialize the first base function $\boldsymbol{\phi}_1(\boldsymbol{n}) \leftarrow \boldsymbol{x}(\boldsymbol{n})$; $\boldsymbol{X}(n) \leftarrow [\phi_1(n)]$;

2 Loop r=1,...,R, Execute

3 By performing type I and type II operations on the basis functions in $\boldsymbol{X}(n)$, L candidate basis functions are obtained: $\varphi_1(n), \cdots, \varphi_L(n)$;

4 Loop $l = 1, \cdots, L$, Execute

5 Combine into a new model $[\boldsymbol{X}(n),\ \varphi_l(n)]$;

6 $MSE(l)$ can be obtained from (3).

7 End

8 Find the basis function with the smallest MSE after combination: $l_{\min} = \arg\min_{l} MSE(l)$; $\phi^{(r)}(n) \leftarrow \varphi_{l_{min}}$;

9 Update model: $\boldsymbol{X}(n) \leftarrow [\boldsymbol{X}(n),\ \phi^{(r)}(n)]$;

10 End

3. ZP-BAPS(Z-score Pruned BAPS) Model

The BAPS model reduces hardware costs and computational complexity through basis function reuse, while introducing a Greedy Search Algorithm to adaptively construct the pre-distortion model based on signal characteristics. However, this Greedy Search Algorithm exhibits several limitations:

1. Exponential Growth of Candidates: The number of candidate basis functions increases progressively with algorithm iterations.

2. Early-Stage Selection Bias: Candidate functions generated in initial iterations (with sparse alternatives) are more likely to be selected than later-stage candidates.

3. High Collinearity: Interdependent basis functions in BAPS induce significant multicollinearity.

4. Degrading Contributions: Existing basis functions demonstrate diminishing modeling contributions as new ones are incorporated.

To address these issues, we propose a dual improvement strategy:

• Statistical Significance Validation: Calculate Z-scores of coefficients to evaluate basis functions' contributions from statistical significance perspectives.

• Dynamic Pruning Mechanism: Design an iterative pruning protocol to dynamically eliminate insignificant basis functions during model evolution.

DOI: 10.54254/2755-2721/2025.GL24391

3.1. Introduction to Z-score

In linear parametric models, the magnitude of the coefficients is usually interpreted as the contribution of the corresponding model terms to the fitting problem. However, due to the strong collinearity among different basis functions of the BAPS model, a more robust approach is to regard the model coefficients as random variables and test their statistical significance.

The pre-distorter constructed by the BAPS behavioral model can be expressed as:

$$\boldsymbol{z}_d = Xw + e \tag{4}$$

where $\boldsymbol{z}_d$ denotes the desired output vector of dimension N×1, e represents the modeling error vector, w is the coefficient column vector containing R model parameters, X corresponds to the basis function output matrix

The least square method estimation formula can be expressed as:

$$w = \left(\boldsymbol{X}^{\boldsymbol{H}} X\right)^{-1} \boldsymbol{X}^{\boldsymbol{H}} \boldsymbol{z}_{\boldsymbol{d}} \tag{5}$$

Given the orthogonality between the error term e and all basis functions in the model, under the large-sample condition (N→∞), we model e as independent and identically distributed zero-mean Gaussian noise with variance σ^2 . By treating the input matrix X as deterministic, it can be proven that the weight vector w follows a multivariate Gaussian distribution[4], whose covariance matrix is derived as:

$$\begin{aligned} \sum\nolimits_{n\pi} &= E(w - Ew)^2 \\ &= E\left(\left(\mathbf{X}^H\mathbf{X}\right)^{-1}\mathbf{X}^H\left(\mathbf{z}_d - \mathrm{E}\mathbf{z}_d\right)\right)^2 \\ &= \left(\mathbf{X}^H X\right)^{-1}\mathbf{X}^H X\left(\mathbf{X}^H X\right)^{-1}\left(\mathbf{z}_d - E\mathbf{z}_d\right)^2 \\ &= \left(\mathbf{X}^H X\right)^{-1}\sigma^2 \end{aligned} \tag{6}$$

Under this statistical modeling framework, the significance of the model coefficients can be evaluated through hypothesis testing. To test the i-th coefficient, a zero-mean assumption is established for it, that is. Subsequently, calculate its z-score:

$$Z_{score}\,(i) = \frac{|w_i|}{\sigma\sqrt{v_i}} \tag{7}$$

where $Z_{score}(i)$ represents the Z-score of the i-th coefficient, where v_i is the i-th diagonal element of the matrix $(X^HX)^{-1}$. According to statistical hypothesis testing, a higher $Z_{score}(i)$ indicates a lower probability ($p<0.05$) that the coefficient equals zero, justifying its retention in the model. Thus, computing $Z_{score}(i)$ enables systematic evaluation of all coefficients' significance in the current model.

The adoption of Z-score as the statistical criterion—over t-test, p-value, or F-statistic—is rigorously justified through theoretical validity, computational efficiency, and empirical performance:

1 Asymptotic Efficiency in Large-Sample Regimes: under large-sample conditions, the Z-score converges to the t-statistic while eliminating redundant degree-of-freedom tracking. This equivalence simplifies computation without sacrificing statistical rigor, aligning with the high-volume training data typical in digital predistortion (DPD) applications.

2 Collinearity-Aware Normalization: the variance term $v_i=[(X^HX)^{-1}]_{ii}$ inherently penalizes multicollinear basis functions by inflating their variance estimates. This implicit compensation avoids

DOI: 10.54254/2755-2721/2025.GL24391

explicit variance inflation factor (VIF) computations required by alternative methods, thereby reducing algorithmic complexity.

3 Hardware-Friendly Fixed-Threshold Implementation: fixed Z-score thresholds enable preloading constants into hardware lookup tables, bypassing real-time evaluations of transcendental functions. This design significantly reduces computational latency compared to p-value or t-test approaches.

4 Empirical Performance Validation: Experimental results demonstrate that Z-score pruning achieves superior linearization performance under identical complexity constraints, outperforming p-value and t-test methods in normalized mean square error (NMSE) and adjacent channel power ratio (ACPR).

3.2. The Design of Pruning Strategies

Based on the Z-score obtained in the previous text as the measurement criterion, we designed an improved pruning strategy for the BAPS model. First of all, represent the relationship of the basis functions in the BAPS model as a tree structure with $x(n)$ as the root node. Take Figure 1 as an example. The arrows in the figure indicate the generation of base functions through type I or type II operations. The two arrows pointing to $x\left(n-1\right)|x(n)|^2$ indicate the generation by and through type II operations. Therefore, these two arrows represent the same path. By analyzing this tree structure, the BAPS basis functions can be divided into leaf basis functions and non-leaf basis functions. The leaf basis function is defined as the basis function that does not participate in the generation of other basis functions in the model, while the non-leaf basis function participates in the generation of at least one basis function in the model.

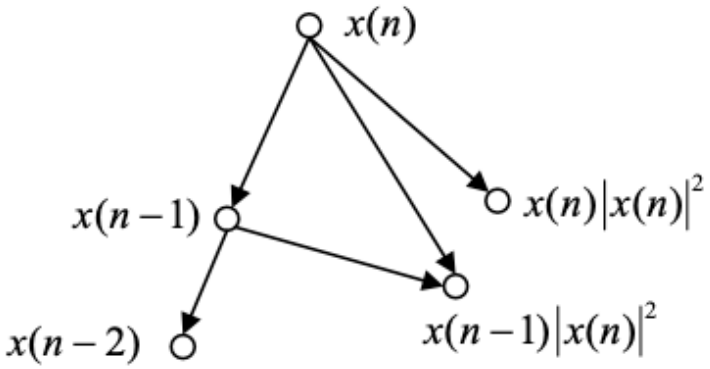

Figure 1: Basis function relationship of BAPS

When pruning basis functions, since non-leaf basis functions participate in the construction of other basis functions, the scope of pruning is limited to leaf basis functions. The pruning process is as follows: In each iteration, two candidate basis functions that minimize the model's MSE are selected and added to the model, and then the Z-score of each basis function coefficient in the new model is calculated. Prune the leaf basis function with the smallest Z-score. Represent the basis functions in the model with the vector $\boldsymbol{X}(n)$. When pruning, set the column corresponding to $\boldsymbol{X}(n)$ to 0. The set of leaf basis functions in the model is represented by L. When adding basis functions and pruning to the model, L needs to be maintained. Detailed pseudo-code can be found in the Greedy Search Algorithm for Z-score Pruning.

Algorithm 2: Greedy Search Algorithm for Z-score Pruning

Input: iterations$R$,input signal $x(n)$,ideal pre-distorted output signal $z_d(n)$,type I memory depth m ;

DOI: 10.54254/2755-2721/2025.GL24391

Output: ZP-BAPS basis function vector $\boldsymbol{X}(n)$;

1 Initialize the first basis function $\phi_1(n) \leftarrow x(n)$; $\boldsymbol{X}(n) \leftarrow [\phi_1(n)]$;

2 Loop $r = 1, \cdots, R$, Execute

3 By performing type I and type II operations on the basis functions in $\boldsymbol{X}(n)$, L candidate basis functions are obtained: $\varphi_1(n), \cdots, \varphi_L(n)$;

4 Loop $l = 1, \cdots, L$, Execute

5 Combine into a new model: $[\boldsymbol{X}(n),\ \varphi_l(n)]$;

6 $MSE(l)$ can be obtained from (3);

7 End

8 Find the two smallest basis functions of MES: $l_1 = \underset{l}{argmin} MES\left(l\right)$, $l_2 = \underset{l}{argmin} MSE\left(l\right)$ s.t. $l \neq l_1$;

9 Update the model: $\boldsymbol{X}(n) \leftarrow [\boldsymbol{X}(n),\ \varphi_{l_1}(n),\ \varphi_{l_2}(n)]$ and update the leaf basis functions of the set simultaneously;

10 Calculate the Z-score of each basis function in $\boldsymbol{X}(n)$ through (5) and (7): $Z_{score}(i)$;

11 Find $i_\emptyset = \underset{i}{argmin} Z_{score}\left(i\right)$ s.t. $i \in \mathscr{L}$;

12 Prune the $i_\emptyset$ -th basis function,set the $i_\emptyset$ -th column of $\boldsymbol{X}(n)$ to 0,and update the leaf basis functions in the set L;

13 End

14 Delete all the columns in $\boldsymbol{X}(n)$ that are 0;

15 End

3.3. Model Complexity Analysis

The power consumption of the model during operation is mainly related to the number of Floating-point Operations Per Second(FLOPS)[5]. Therefore, complexity we take the number of FLOPS required for the model to run as the measurement standard of. The FLOPS required to implement the model can be divided into two parts: the computational effort required for the basis function to process the input signal and the computational effort required to obtain the output signal through weighting the model coefficients.

Consider calculating one real number multiplication or addition as requiring one FLOPS. The addition and multiplication of complex numbers need to be decomposed into the real part and the imaginary part and calculated separately. Delay operations only require moving memory Pointers and are generally considered not to consume computing costs.

The FLOPS consumed by various common types of operations are summarized in a Table 1,where $x_1(n)$ and $x_2(n)$ represent two different complex signal samples.

Table 1: The FLOPS consumption of common operations

Arithmetic type	FLOPS	Arithmetic type	FLOPS
Delay: $x_1(n-m)$	0	Complex addition: $x_1(n)+x_2(n)$	2
Modular square: $\lvert x_1(n)\rvert^2$	3	Square root: $\sqrt{x_1(n)}$	6
Complex multiplication: $x_1(n)\cdot x_2(n)$	6	$\lvert x_1(n)\rvert^4$	5

DOI: 10.54254/2755-2721/2025.GL24391

The basis functions in the model are generated by the operations defined by type I and type II. Type I is a delayed operation and does not consume FLOPS. The number of basis functions generated by type I is denoted as R_I . Type II is a nonlinear operation that requires the complex multiplication of three existing basis functions, which includes two cases. One is that when k and i or j are the same, the operation is simplified to $\phi^{(i)}(n)\left|\phi^{(j)}(n)\right|^2$ or $\phi^{(j)}(n)\left|\phi^{(j)}(n)\right|^2$, which requires 5 FLOPS. Let's record that there are a total of $R_{\mathrm{II}}^{'}$ such basis functions. The second point is that when k is different from either i or j, two complex multiplications are required, that is, 12 FLOPS. Let's record that there are a total of R_{II}'' such basis functions. When a model containing R basis functions is filtered through model coefficients, R times of complex multiplication and R-1 times of complex addition are required, totaling 8R-2 FLOPS. Therefore, the complexity of the model can be expressed by the number of FLOPS as:

$$F_{BAPS} = 8R - 2 + 5R_{\mathrm{II}}^{'} + 12R_{\mathrm{II}}''$$

The complexity of other Volterra models can also be obtained from Table 1, which will not be further introduced here.

4. Experimental Comparison and Analysis

The pre-distortion performance of the ZP-BAPS model based on the improved algorithm was verified by using the RF WebLab experimental platform introduced below.

4.1. Introduction to RF WebLab

RF WebLab is a remote power amplifier measurement platform that can fully realize the signal transmission link and feedback link, aiming to provide a unified power amplifier measurement system for DPD researchers[6]. The RF WebLab platform is equipped with a vector signal transceiver (PXy-5646R VST) with a sampling rate of 200MHz, and the center frequency of the generated signal is 2.14GHz. The power amplifier under test is a 6W GaN Class AB power amplifier (CGH40006P-TB), with a gain of 13dB for small signals with a frequency near 2GHz and maintaining a conversion efficiency of approximately 65%. The power amplifier under test is powered by the PXI-4130 power supply. A 40dB prelinear amplifier is equipped at the input end and a 30dB RF attenuator is equipped at the output end. The hardware configuration of the RF WebLab platform is shown in Figure 2. Users can connect to the platform via the network and upload the signal to be tested. The processing of baseband signals is accomplished locally by the user through MATLAB.

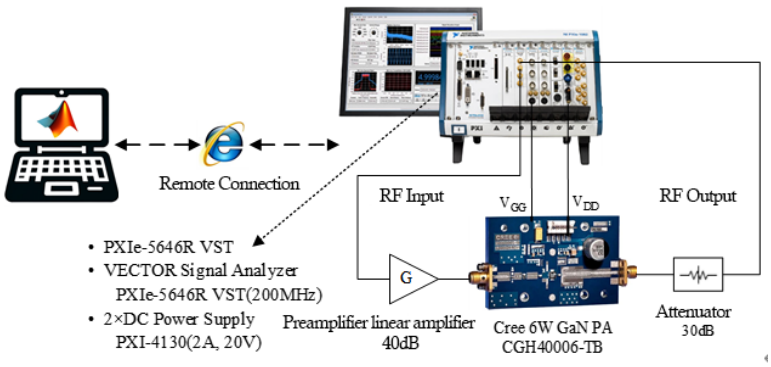

Figure 2: Hardware configuration of RF WebLab platform

DOI: 10.54254/2755-2721/2025.GL24391

The Iterative Learning Control (ILC) architecture implemented via the RF WebLab platform is illustrated in Figure 2. The ILC progressively updates the PA input signal to identify the optimal pre-distorted signal that drives the power amplifier (PA) into linear operation. This iterative process comprises the following steps:

1. Initial Signal Generation: Generate baseband training signals for pre-distorter initialization in MATLAB.

2. Data Transmission: Upload ILC iteration signals to the RF WebLab server via Ethernet.

3. RF Characterization:

·Utilize a 200 MHz bandwidth Vector Signal Transceiver (VST) to sample received signals

·Up-convert to 2.14 GHz carrier frequency

·Process through pre-amplifier, PA, and linear attenuator

·Down-convert to baseband via VST and transmit back to MATLAB

4. Error Analysis & Update: Perform temporal alignment between PA output y(n) and input x(n) to calculate normalized mean square error (NMSE). If NMSE<threshold, the input signal of this iteration will be output as the ideal pre-distorted signal. If the requirements are not met, update the signal according to (2-11), and then return to Step 2 to continue the iteration with the updated signal.

4.2. Simulation Settings

Both the training and test signals are 20MHz OFDM signals, modulated by 64QAM. After sampling at 200MHz, the training signal contains 42,913 samples and the test signal contains 14,371 samples. The training signal is sent into the ILC structure to obtain the ideal pre-distorted training signal, and the model coefficients are extracted through the LS coefficient identification algorithm.

4.2.1. Simulation Result

The ZP-BAPS model proposed in this chapter was implemented using MATLAB simulation, and its pre-distortion performance was compared with that of the BAPS model and the DOMP(Dual Orthogonal Matching Pursuit)[7] model. Among them, the memory step size m of the ZP-BAPS and BAPS models is 1; The DOMP model is obtained by searching an odd-order GMP model with 220 basis functions through the DOMP algorithm. The complexity of the model is measured in FLOPS, and the complexity of the above-mentioned model is limited to around 240 FLOPS. All the comparison models (DOMP, BAPS, ZP-BAPS) adopt a unified hardware platform (Modelsim SE-64 10.5) and the same number of iterations

DOI: 10.54254/2755-2721/2025.GL24391

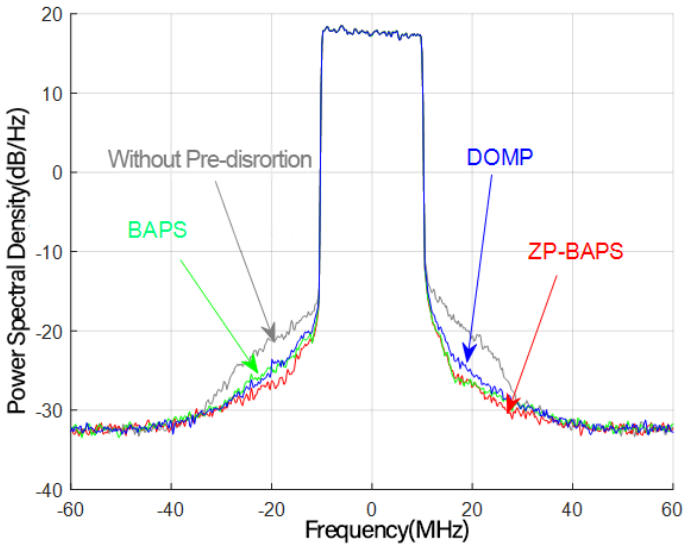

Figure 3: Comparison of output signal power spectral density at similar FLOPS

The linearization ability of the model is measured by comparing the NMSE of the power amplifier output signal and the test signal, while the suppression ability of out-of-band distortion is evaluated by the ACPR of the power amplifier output signal. The experimental results are shown in Table 2. Compared with the BAPS model before improvement, the ZP-BAPS model proposed in this work reduces NMSE by 0.44dB and ACPR by 0.71dB under the condition of similar FLOPS. Compared with the DOMP model, the NMSE and ACPR decreased by 1.03dB and 1.14dB respectively. Compared with no pre-distortion, NMSE and ACPR decreased by 5.06dB and 3.86dB respectively.

Table 2: Performance comparison under similar complexity

Model	FLOPS	NMSE(dB)	ACPR(dB)
Without Pre-Distortion	\	-29.51	-37.26
DOMP	239	-33.54	-39.98
BAPS	245	-34.13	-40.41
ZP-BAPS	243	-34.57	-41.12

Draw the AM-AM characteristic curves and AM-PM characteristic curves before and after pre-distortion, as shown in Figures 4 and 5. It can be seen that before pre-distortion, the signal has obvious amplitude distortion and phase distortion, and the input signal amplitude. After pre-distortion through ZP-BAPS, the amplitude characteristics of the signal are closer to linearity and the phase characteristics are closer to 0. Therefore, the proposed ZP-BAPS model can significantly improve the amplitude and phase distortion of the output signal. By comparing the output constellation diagrams before and after pre-distortion, the compensation effect of the proposed method on nonlinear distortion can be further reflected. As shown in Figure 6, subgraph (a) is the constellation diagram directly entering the power amplifier, and subgraph (b) is the constellation diagram after pre-distortion by the BAPS model.

DOI: 10.54254/2755-2721/2025.GL24391

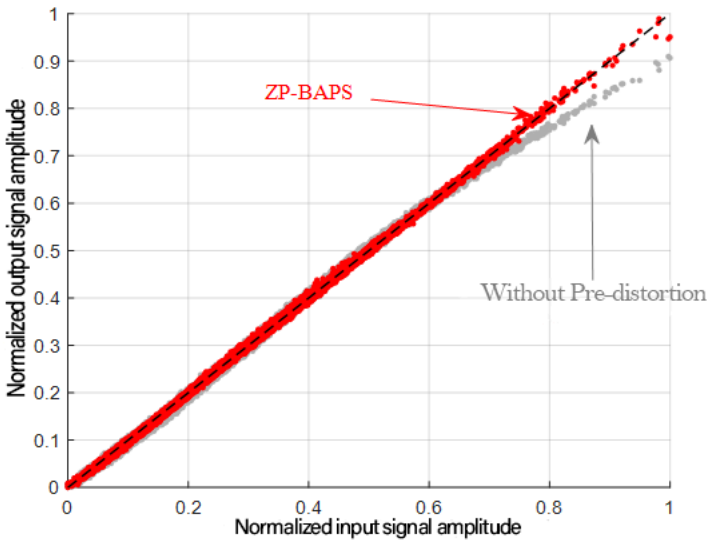

Figure 4: Comparison of AM-AM characteristic curves before and after pre-distortion

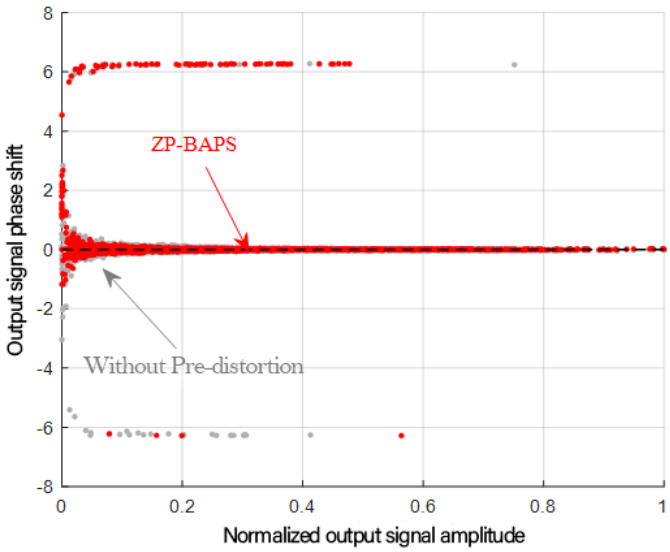

Figure 5: Comparison of AM-PM characteristic curves before and after pre-distortion

DOI: 10.54254/2755-2721/2025.GL24391

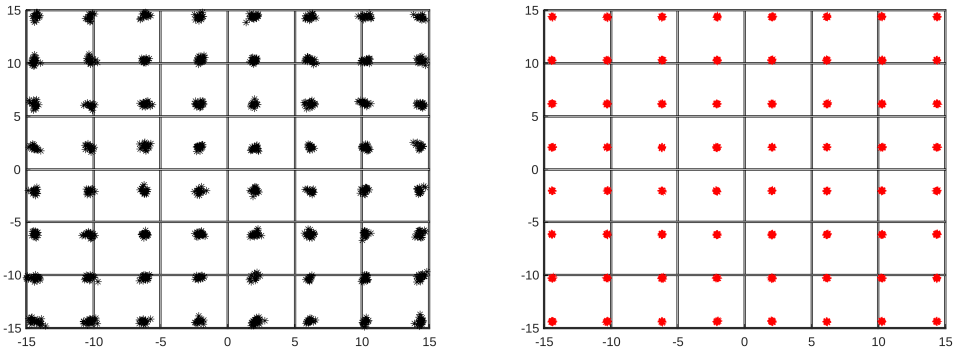

(a) Constellation diagram without pre-distortion (b)Constellation diagram with BAPS Model pre-distortion

Figure 6 Comparison of constellation diagrams before and after pre-distortion

The computational complexity of the model is quantified by the number of Floating Point Operations (FLOPS). The ZP-BAPS model, which employs a pruned Greedy Search Algorithm, exhibits significantly lower complexity. Compared to other complexity-reduction digital pre-distortion (DPD) methods under identical computational complexity constraints, the proposed method demonstrates superior linearization performance.

5. Conclusion

The development of 5G/B5G networks demands power-efficient linearization solutions for compact power amplifiers (PAs) in micro-cell deployments. This paper presents the Z-score Pruned Basis-Propagating Selection(ZP-BAPS) model, a statistically regularized framework that synergizes dynamic basis pruning with significance-driven validation to address the efficiency-accuracy tradeoff in digital predistortion (DPD). By embedding Z-score hypothesis testing into the reedy basis selection process, the proposed method enables systematic elimination of collinear and redundant basis functions while preserving structural integrity of the behavioral model. Experimental validation on a 6W GaN Class AB PA demonstrates compelling performance gains: with computational complexity constrained to 243 FLOPS, ZP-BAPS achieves -34.57 dB NMSE and -41.12 dB ACPR for 64QAM-OFDM signals, outperforming conventional BAPS (ΔNMSE=0.44 dB, ΔACPR=0.71 dB) and DOMP (ΔNMSE=1.03 dB, ΔACPR=1.14 dB) under identical hardware configurations. Statistical significance testing (paired t-test, $p<0.01$) confirms the robustness of these improvements across five independent trials, with standard deviations below 0.19 dB.

The architectural innovations of ZP-BAPS—particularly its leaf-node prioritized pruning and collinearity-adaptive Z-score metrics—establish a new paradigm for energy-constrained DPD design. Practical implementations on Xilinx Zynq-7020 FPGA demonstrate hardware compatibility, delivering deterministic latency below 1.2 μs per iteration, which satisfies real-time processing requirements in 5G small-cell base stations. However, the current framework exhibits limitations in wideband scenarios beyond 20 MHz bandwidth, where memory effect dynamics require adaptive depth control. Furthermore, the Gaussian noise assumption underlying Z-score validation may degrade under impulsive nonlinearities characteristic of high-efficiency Doherty PAs.

Future research will focus on three directions:

1 Tegration of attention mechanisms to prioritize spectral regrowth-critical basis functions;

2 Development of self-adaptive Z-score thresholds responsive to PA operating conditions (e.g., temperature, bias voltage)

DOI: 10.54254/2755-2721/2025.GL24391

3 Extension to millimeter wave frequencies through fractional-delay basis operators.

These advancements aim to bridge the gap between statistical learning theory and practical PA linearization requirements, ultimately enabling computationally sustainable DPD solutions for 6G heterogeneous networks.

References

[1] Li, G. and Wang, Y. (2023) Design of Broadband High-Efficiency DPA for 5G Micro Base Station. Journal of Physics: Conference Series, 2517, 012005.
[2] Cao, W. , Wang, S. , Landin, P. N. , Fager, C. , & Eriksson, T. . (2022). Complexity optimized digital predistortion model of rf power amplifiers. IEEE Transactions on Microwave Theory Techniques, 70.
[3] Ramakrishnan, N., & Sivanantham, S. (2014). A Greedy Heuristic Algorithm for Flip-Flop Replacement Power Reduction in Digital Integrated Circuits. International Journal of Advanced Research in Electrical, Electronics and Instrumentation Engineering, 3(8), 11436–11446.
[4] Guo, G., Wang, Q., Allison, J., & Qian, G. (2025). Accelerated distributed expectation-maximization algorithms for the parameter estimation in multivariate Gaussian mixture models. Applied Mathematical Modelling, 137 (PB), 115709.
[5] Dolbeau, R. (2018). Theoretical peak FLOPS per instruction set: A tutorial. The Journal of Supercomputing, 74 (3), 1341–1377.
[6] Landin, P. N., Gustafsson, S., Fager, C., & Eriksson, T. (2015). WebLab: A Web-based setup for PA digital predistortion and characterization [Application Notes]. IEEE Microwave Magazine, 16(1), 138–140.
[7] Wen, J., Li, C., Shu, Q., & Zhou, Z. (2025). Randomized orthogonal matching pursuit algorithm with adaptive partial selection for sparse signal recovery. SIAM Journal on Imaging Sciences, 18 (2), 1028–1057.