Proceedings of CONF-FMCE 2025 Symposium: Semantic Communication for Media Compression and Transmission
DOI: 10.54254/2755-2721/2025.GL24390

A Review of Air Compressor Optimization Strategies for Hydrogen Fuel Cell Systems

Haozhe Liang

Queen Mary University of London School of Engineering, NWPU (Northwestern Polytechnical University), Xi'an, China
1420829869@qq.com

Abstract. Fuel cell performance and cost are closely tied to their air circulation systems, with the air compressor being a key component. Recent advancements in air compressor optimization, including the use of lightweight materials like carbon fiber, have been significant, although challenges remain in energy recovery and noise control. This paper analyzes four distinct types of air compressors—centrifugal, screw, scroll, and hybrid—focusing on efficiency enhancements, cost management, and application contexts. It summarizes the current state of the air compressor industry and explores future development trends. Centrifugal compressors boosted isentropic efficiency by 34.5% via parameter optimization and carbon fiber use. Screw compressors achieved high efficiency through structural optimization, while scroll compressors utilized multi-scroll designs. Hybrid compressors optimized energy efficiency via system integration, reducing costs by 224,844 USD and 6.37% per unit. Centrifugal compressors excel in high-power fuel cell vehicles, screw compressors in industrial settings (0.2 MPa, 7000-10,000 rpm), scroll compressors in miniaturized systems (298 mm, 200 m^3/h, 2.827 m/s), and hybrid compressors in niche applications like shipping. Future trends: intelligence, lightweighting, and multi-scenario adaptability.

Keywords: Fuel cell, Air compressor, Energy conservation, Efficiency, Lightweight

1. Introduction

A fuel cell is a device that directly converts the chemical energy of fuel (such as hydrogen) and oxidant (such as oxygen) into electrical energy through electrochemical reactions, featuring high efficiency and low emissions [1]. Air compressors play a crucial role in fuel cell systems, mainly used to compress air and deliver oxygen-rich gas to the cathode to support the reduction reaction of oxygen [2]. However, as technology matures, enterprises' requirements for air compressors are gradually increasing. For instance, this technology is used in the development of hydrogen fuel cells (HFC), but as HFC technology becomes increasingly mature, people have begun to shift towards cost control. The key to cost control lies in the air circulation system, whose core component is the air compressor [3], as shown in Figure 1.

To control costs and enhance efficiency, various solutions exist for optimizing the air circulation system through improvements to the air compressor. For screw compressors, Stosic et al. [4]

© 2025 The Authors. This is an open access article distributed under the terms of the Creative Commons Attribution License 4.0 (https://creativecommons.org/licenses/by/4.0/).

DOI: 10.54254/2755-2721/2025.GL24390

employed a mathematical model based on the rack generation algorithm for rotor profiles, combined with a numerical model, to provide an optimization plan for the given dimensions and operating parameters of the compressor components. Furthermore, for the centrifugal air compressor, Fu et al. [5] based on the prediction performance of the linear Boosting model and conducted multi-objective optimization of the impeller structure parameters through the reference Vector-guided Evolutionary algorithm (RVEA), reducing the impact loss and entropy increase of the gas. Finally, beyond the optimizing individual air compressors, choosing the appropriate type and operational indicators of air compressors based on different application environments can also better save energy and improve efficiency [3]. In addition to analyzing the above optimization methods, this article will introduce four different types of air compressors (centrifugal compressors, screw compressors, vane compressors, and scroll compressors), provide a detailed review of their cutting-edge optimization methods and developments, and predict and look forward to the difficulties and future technical directions of air compressors in the application of fuel cells. This study holds significant importance as it aims to enhance the performance and reduce the costs of fuel cell systems by optimizing air compressors, thereby promoting the wider adoption of clean and sustainable energy technologies and contributing to global efforts in achieving energy efficiency and reducing greenhouse gas emissions.

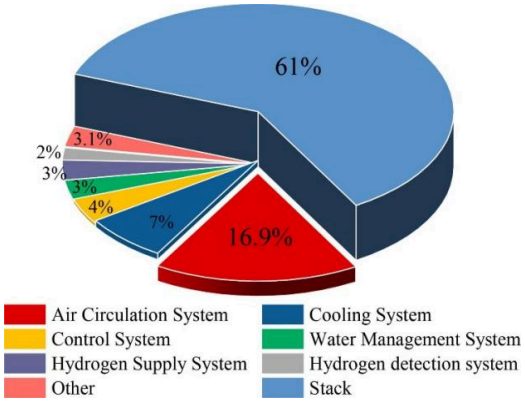

Figure 1: Cost composition of HFC system [3]

2.Optimization and development of air compressors for enhanced fuel cell performance

2.1 Centrifugal air compressor

Centrifugal air compressors are the core components of the cathode gas supply system in hydrogen fuel cell vehicles, enhancing the reaction efficiency of the stack through high-pressure air supply. However, the balance between efficiency and energy consumption remains a key challenge. For this problem, Shi et al. [6] adopted Grey Relational Analysis (GRA) combined with Taguchi orthogonal experiments, taking rotational speed, inlet temperature and pressure as variables, to achieve multi-objective optimization of isentropic-entropy efficiency and total power consumption. Experiments show that the optimal parameter combination (rotational speed 50k RPM, inlet temperature 19.3°C, inlet pressure 96.6 kPa) increases the efficiency by 34.5% (up to 58.12%) and reduces the power consumption by 48.5% (to 3.1648 kW), significantly alleviating the problems of surge and high energy consumption in the traditional design. Furthermore, Liu et al. [7] conducted performance optimization for the small centrifugal air compressor in the proton exchange membrane fuel cell system through simulation and experimental research based on the Computational Fluid Dynamics (CFD) method. The design input parameters of the compressor were determined based on the output

DOI: 10.54254/2755-2721/2025.GL24390

power and working pressure of the fuel cell. The internal flow and performance of the compressor were predicted by using the CFD method. The influence of leakage flow on performance was simulated by changing the tip clearance (0.0, 0.25, 0.5 and 0.75 mm). Researchers found that an increase in the tip clearance will lead to intensified leakage, reduced uniformity of the outlet velocity, and thereby lower the efficiency of the compressor. The experimental results prove that a tip clearance of approximately 0.5mm in the engineering design can best minimize the impact. In terms of experiments, a prototype of the compressor was fabricated and tested under actual working conditions. The experimental system included an air filter, a compressor, an air cooler, etc. By changing the rotational speed set by the controller and the opening degree of the control valve, the flow rate and exhaust pressure under different working conditions were measured. The results show that the simulated exhaust pressure is close to the experimental data under the research conditions, with a maximum error of less than 6%. Under the main working conditions, the isentropic efficiency of the prototype can reach 70%, and the design point efficiency is as high as 75%. In the future, by integrating digital twin monitoring, carbon fiber materials and energy recovery technologies, centrifugal compressors are expected to achieve breakthroughs in efficiency and environmental adaptability, and promote the efficient and lightweight development of fuel cell systems.

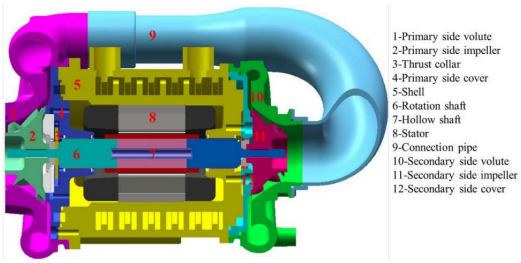

Figure 2: The half structure of the centrifugal air compressor [6]

2.2 Screw compressor

Screw air compressors, as a type of positive displacement compressor, have the advantages of simple structure, high efficiency, reliability, wide flow range and good pressure ratio/flow characteristics. They can provide the required high-pressure air for fuel cell systems and are one of the key components of the air supply system for fuel cell vehicles. They play an important role in improving the performance and efficiency of fuel cells. However, there are also some challenges, such as high noise levels, and noise reduction measures will increase the cost, quality and complexity of the system, etc. He et al. [8] In this paper, by optimizing the rotor profile, adopting the combination of arcs and conjugate curves, and combining computer-aided design (CAD) and finite element analysis (FEA) to optimize the geometric parameters of the profile, it ensures that the contact lines are continuous and the gap distribution is uniform during the meshing process of the male and female rotors, thereby reducing gas leakage and friction loss. The built-in volume ratio (1.7) and the geometry of the exhaust port were also optimized through multi-physics field coupling simulation. For example, a combined axial and radial exhaust port was adopted to shorten the discharge path of high-pressure gas, suppress pressure pulsation and reduce flow loss. And by controlling the internal rotor speed of the twin-screw compressor between 5000 rpm and 10000 rpm, controlling the suction temperature to 25 ℃ and suction pressure (0.1016 MPa), studying the influence of speed on compressor performance. Repeat the data measurement five times and use the average value for data reduction. The experimental results show that when the discharge pressure is

DOI: 10.54254/2755-2721/2025.GL24390

0.2 MPa and the rotational speed is 9000 rpm, the volumetric efficiency of the compressor reaches 70%, the isentropy efficiency is 55%, and the mechanical efficiency is 80%. Moreover, the performance fluctuation is small within the range of 7000-10,000 rpm, verifying its wide load adaptability. These values can be used in the design of air-cooled oil-free twin-screw compressors for similar applications. In the future, the development of screw air compressors will focus on intelligent control, material innovation, energy recovery integration, as well as bionic design and multi-physics field optimization. These advancements aim to further enhance efficiency, reliability, and environmental adaptability, thereby promoting the large-scale application of hydrogen fuel cell vehicles. The advancement of intelligent control and materials science will enhance the reliability, lifespan and maintenance convenience of compressors, and is expected to be more widely applied in the construction of a low-carbon society.

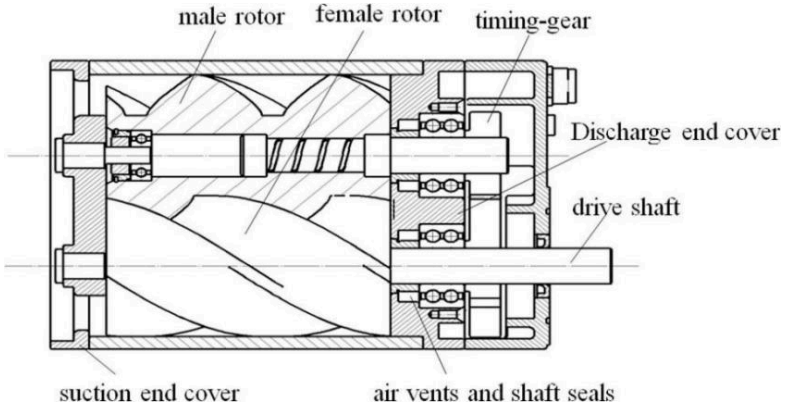

Figure 3: Structure of the prototype compressor [8]

2.3 Scroll compressor

Scroll air compressors play a crucial role in fuel cell systems. Compared with other types of compressors, scroll compressors are favored for their compact structure, high efficiency, low vibration and noise, as well as good operational reliability. However, scroll compressors also face some challenges in practical applications, such as how to achieve a large volume flow rate while maintaining oil-free lubrication and meeting the design requirements of a compact structure at the same time. Wang et al. [9] proposed a new type of design for a Dual-scroll air compressor in response to these problems. By establishing an analysis model of multi-scroll compressors, the working characteristics and structural dimensions of single-scroll, double-scroll and triple-scroll compressors were compared and analyzed. The research finds that the double-scroll compressor demonstrates significant advantages in terms of volumetric flow rate, internal volume ratio, relative friction velocity and scroll size. Compared with the traditional single-scroll compressor, the volume flow rate of the double-scroll compressor has increased by 78%, while the relative friction velocity has decreased by 44%. This makes it have better performance and a longer service life under oil-free lubrication conditions. In the experimental verification section, the author developed a prototype of the double-scroll compressor and tested its performance. The experimental results show that the volumetric efficiency of this twin-scroll compressor under the design working conditions (exhaust volumetric flow rate 200 m^3/h, compression ratio 2.5) reaches 92%, and the isentropic efficiency reaches 88.9%. These results verified the accuracy of the established multi-scroll compressor analysis model and proved the feasibility and superiority of the dual-scroll compressor in the application of fuel cell vehicles. In the future, with the development of fuel cell technology and the

DOI: 10.54254/2755-2721/2025.GL24390

growth of market demand, scroll air compressors are expected to play a greater role in improving system performance, reducing energy consumption and lowering noise.

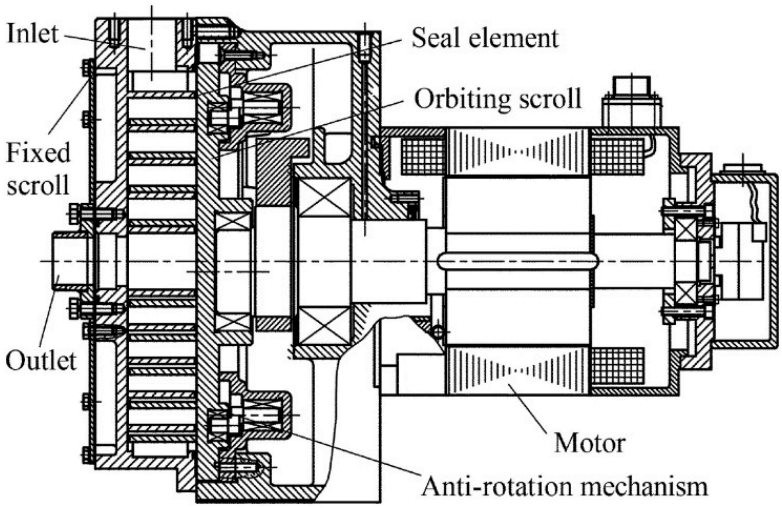

Figure 4: Design of the double-scroll compressor used in the PEMFC[9]

2.4 Hybrid ompressor

More and more emerging technologies can be applied in the development and research of air compressors, which has greatly promoted the development of fuel cells. Ali et al. [10] developed a coupled multi-effect distillation-thermal vapor compression (MED-TVC) system by integrating air compressors (AC) and fuel compressors (FC). Moreover, they proposed an innovative optimization method, wherein a mathematical model was established using the Engineering Equation Solver (EES). This model allows for the dynamic adjustment of key parameters, such as inlet temperature, pressure ratio, fuel utilization rate, and steam-to-methane ratio, to achieve optimal overall system performance. Experimental verification shows that by integrating a heat recovery steam generator (HRSG) to directly supply steam to solid oxide fuel cells (SOFC), the water pump in the traditional system can be eliminated, reducing the complexity and weight of the equipment, while improving the heat transfer efficiency. After optimization, the system's capital cost has been significantly reduced, the unit cost of time has decreased by 6.37%, and the efficiencies of the first and second laws have increased to 92.85% and 59.39% respectively. Furthermore, the parameter analysis shows that when the pressure ratio is 12 and the steam/methane ratio is 1.5, the system achieves the best balance between power generation efficiency and water production, verifying the effectiveness of the optimization strategy. This new type of air compression technology can be applied in fuel cells and form a brand-new system - gas turbines. This technology not only developed a new type of air compression technology through innovative experiments, but also enables fuel cells to be better applied in some special environments, such as some ship applications.

DOI: 10.54254/2755-2721/2025.GL24390

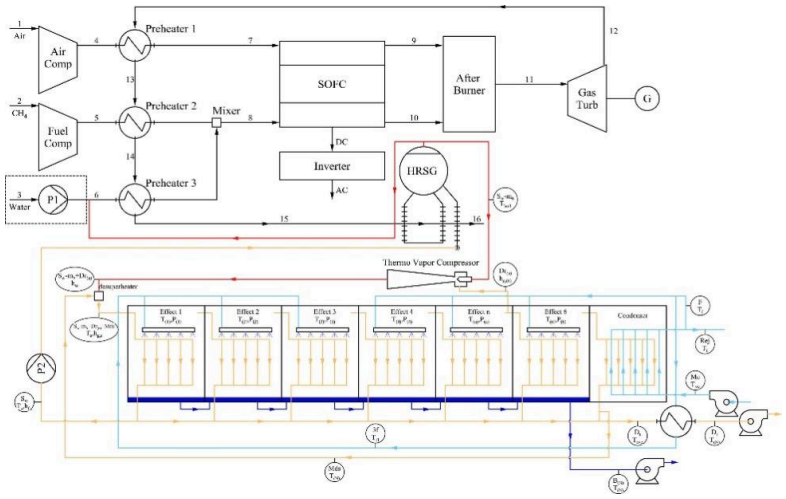

Figure 5: A diagram of hybrid SOFC-GT Coupled to multi effect desalination with thermo vapor compressor[10]

3. Conclusion

As a core component of the fuel cell system, the performance of the fuel cell air compressor directly affects the efficiency, reliability and cost of the system. This paper reviews the technological progress and optimization strategies of centrifugal, screw, scroll and hybrid air compressors, and analyzes the advantages, disadvantages and applicable environments of different types of air compressors. Overall, the optimization paths for various types of compressors focus on mathematical model-driven design, multi-objective parameter collaboration, material and structural innovation, as well as the deep integration of experiments and simulations. The common challenge lies in the trade-off between efficiency improvement and energy consumption, noise, and cost.

Future development and industry difficulties

1. Materials and lightweighting: The application of new materials such as carbon fiber can reduce weight and enhance corrosion resistance, but high costs and complex manufacturing processes restrict large-scale application.

2. Energy efficiency and environmental adaptability: Develop efficient energy recovery technologies (such as waste heat power generation) to reduce parasitic power consumption, while addressing performance degradation and reliability challenges under extreme working conditions.

3. Noise and vibration control: To address the low-frequency noise issue of screw and centrifugal compressors, it is necessary to explore bionic structures or active noise reduction technologies, but this may increase system complexity and maintenance costs.

In the future, air compressor technology will evolve towards higher efficiency, compactness and intelligence. However, its commercialization process is still constrained by systemic challenges such as cost pressure and insufficient hydrogen energy infrastructure support.

References

[1] Wang, Y., Chen, K. S., Mishler, J., Cho, S. C., & Adroher, X. C. (2011). A review of polymer electrolyte membrane fuel cells: Technology, applications, and needs on fundamental research. Applied Energy, 88(4), 981–1007. https: //doi.org/10.1016/j.apenergy.2010.09.030

[2] Li, Y., Pei, P., Ma, Z., Ren, P., & Huang, H. (2020). Analysis of air compression, progress of compressor and control for optimal energy efficiency in proton exchange membrane fuel cell. Renewable and Sustainable Energy Reviews, 133, 110304. https: //doi.org/10.1016/j.rser.2020.110304

DOI: 10.54254/2755-2721/2025.GL24390

[3] Guo, X., Hu, X., & Zhang, S. (2024). Application status of variable-frequency drive in hydrogen fuel cell air compressors from an industrial viewpoint: A review. Sustainable Energy Technologies and Assessments, 64, 103716. https: //doi.org/10.1016/j.seta.2024.103716
[4] Stosic, N., Smith, I. K., & Kovacevic, A. (2003). Optimisation of screw compressors. Applied Thermal Engineering, 23(10), 1177–1195. https: //doi.org/10.1016/s1359-4311(03)00059-0
[5] Fu, J., Wang, H., Sun, X., Bao, H., Wang, X., & Liu, J. (2024). Multi-objective optimization for impeller structure parameters of fuel cell air compressor using linear-based boosting model and reference vector guided evolutionary algorithm. Applied Energy, 363, 123057–123057. https: //doi.org/10.1016/j.apenergy.2024.123057
[6] Shi, T., Chen, Q., Peng, X., Feng, J., & Guo, Y. (2023). Multi-objective optimization of the oil-free centrifugal air compressor in hydrogen fuel cell vehicles based on grey relational analysis. International Journal of Hydrogen Energy, 48(67), 26341–26355. https: //doi.org/10.1016/j.ijhydene.2023.03.346
[7] Liu, Y., Zhao, Y., Qichao, Y., Liu, G., Li, L.-S., & Gao, Z. (2021). Performance study of centrifugal air compressor for proton exchange membrane fuel cell systems. Energy Science & Engineering, 10(1), 208–218. https: //doi.org/10.1002/ese3.1023
[8] He, Y., Xing, L., Zhang, Y., Zhang, J., Cao, F., & Xing, Z. (2018). Development and experimental investigation of an oil-free twin-screw air compressor for fuel cell systems. Applied Thermal Engineering, 145, 755–762. https: //doi.org/10.1016/j.applthermaleng.2018.09.064
[9] Wang, J., Han, Y., Pan, S., Wang, Z., Cui, D., & Geng, M. (2022). Design and development of an oil-free double-scroll air compressor used in a PEM fuel cell system. Renewable Energy, 199, 840–851. https: //doi.org/10.1016/j.renene.2022.08.154
[10] Mohammadnia, A., & Asadi, A. (2020). A hybrid solid oxide fuel cell-gas turbine fed by the motive steam of a multi-effects desalination-thermo vapor compressor system. Energy Conversion and Management, 216, 112951–112951. https: //doi.org/10.1016/j.enconman.2020.112951