Proceedings of the 3rd International Conference on Mechatronics and Smart Systems
DOI: 10.54254/2755-2721/140/2025.22008

Progress in the Growth of Silicon Carbide and Their Applications in Power Devices

Xingzhi Jiang

School of Microelectronics, Xidian University, Xi'an, China
22009102213@stu.xidian.edu.cn

Abstract: This paper comprehensively reviews the research progress of silicon carbide (SiC) devices, highlighting their significance in the field of power electronics. SiC exhibits remarkable advantages in extreme application scenarios such as high-temperature, high-frequency, and high-voltage environments, attributable to its favorable electrical properties, including a wide bandgap, high thermal conductivity, high saturated electron drift velocity, and high breakdown electric field. The article systematically presents the development and characteristics of SiC substrate growth processes (e.g., the physical vapor transport (PVT) method and the liquid-phase method), epitaxial film processes (chemical vapor deposition (CVD) method). It also conducts an in-depth analysis of the structures, performances, existing issues, and improvement measures of devices such as Schottky diodes, bipolar junction transistors (BJTs), metal-oxide-semiconductor field-effect transistors (MOSFETs), and insulated-gate bipolar transistors (IGBTs). Additionally, the practical applications of SiC devices in high-temperature, high-voltage, and high-frequency fields are explored. This review provides a comprehensive reference for research in this field and contributes to the further advancement of SiC device technology.

Keywords: Silicon carbide devices, Material growth processes, Device structures, Application fields, Development challenges

1. Introduction

Silicon carbide (SiC) has found extensive applications in high-temperature, high-frequency, and high-voltage scenarios due to its excellent electrical properties, including a wide bandgap, high thermal conductivity, high saturated electron drift velocity, and high breakdown electric field. However, the journey from the emergence of SiC to its current large-scale application has been a long one. In the early 20th century, the growth rate of SiC materials was extremely slow, and a large number of structural defects, such as micropipes and dislocations, occurred during growth, which limited the application of the materials in devices. By the middle of the 20th century, with the progress of science and technology, new process technologies, such as PVT, CVD, and LPE, were developed. These technologies significantly improved the growth rate and quality of SiC materials. Meanwhile, by precisely controlling growth parameters such as temperature, pressure, and gas flow rate, the defect density of the crystals was effectively reduced. With the improvement of material quality, SiC devices began to develop. Some simple SiC-based devices, such as p-i-n LED diodes [1, 2] and pn-junction diodes [3], were developed first. In the late 20th century and in modern times, with the maturation of material growth technologies and the continuous progress of semiconductor processes, SiC devices

© 2025 The Authors. This is an open access article distributed under the terms of the Creative Commons Attribution License 4.0 (https://creativecommons.org/licenses/by/4.0/).

DOI: 10.54254/2755-2721/140/2025.22008

gradually evolved from PN junctions to structures such as MOSFETs. The emergence of SiC MOSFETs has brought revolutionary changes to the power electronics industry. Compared with traditional silicon-based MOSFETs, SiC MOSFETs possess advantages such as higher breakdown voltage, higher operating temperature, and lower on-resistance, thanks to the excellent electrical properties of SiC materials. For example, in applications such as photovoltaic inverters [4], the use of SiC MOSFETs can significantly enhance the system efficiency and power density while reducing energy losses. However, to promote the wider application of SiC power devices, reliability issues need to be addressed, such as high-temperature stability, gate oxide reliability, and the impact of the radiation environment. In recent years, researchers have been conducting in-depth studies from multiple aspects, including material optimization, device structure design, and process improvement, to further promote the reliable application of SiC devices in more fields.

2. Material Growth

2.1. Substrate Growth Process

SiC has over 250 known polytypes, among which the common ones are 3C-SiC, 4H-SiC, and 6H-SiC. Compared with traditional first-generation semiconductor silicon and second-generation semiconductor gallium arsenide, these polytypes of SiC exhibit distinct advantages in certain electrical properties, as shown in Table 1.

Table 1: Physical properties of SiC semiconductors referenced to Si and GaAs [5]

Property	Si	GaAs	3C-SiC	6H-SiC	4H-SiC
Bandgap,Eg (eV at 300K)	1.12	1.43	2.4	3.0	3.2
Critical electeic field, Ec(V/cm)	$2.5 \cdot 10^5$	$3 \cdot 10^5$	$2 \cdot 10^6$	$2.5 \cdot 10^6$	$2.2 \cdot 10^6$
Thermal conductivity, λ (W/cmK at 300K)	1.5	0.5	3-4	3-4	3-4
Saturated electron drift velocity, vsat(cm/s)	$1 \cdot 10^7$	$1 \cdot 10^7$	$2.5 \cdot 10^7$	$2 \cdot 10^7$	$2 \cdot 10^7$
Electron Mobility,μ_n ($cm^2/V \cdot s$)	1350	8500	1000	500	950
Hole Mobility,μ_p ($cm^2/V \cdot s$)	480	400	40	80	120
Dielectric constant,ε_r	11.9	13.0	9.7	10	10

In the early days, the existence of SiC polytypes made it difficult to achieve single-crystal growth, thus restricting its application in devices [6]. However, in 1955, Lely invented a single-crystal sublimation process for growing high-purity α-SiC, breaking this deadlock. In this process, a SiC powder source is heated to 2500°C, and the solid sublimes and condenses into a SiC single crystal upon cooling. Nevertheless, when growing single crystals using this method, the crystal nucleation is uncontrolled, and the crystal size is random, failing to meet the requirements of practical applications [7]. In 1978, Soviet scientists proposed the seed crystal sublimation method, also known as the "improved Lely method" or the physical vapor transport (PVT) method, to grow SiC single crystals. This method addressed the problem of random nucleation and growth in space in the Lely method, enabling the growth of larger and higher-quality crystals and laying the foundation for the current mainstream SiC crystal growth technology. Figure 1 shows a schematic diagram of SiC single-crystal

DOI: 10.54254/2755-2721/140/2025.22008

growth by the PVT method. With the continuous optimization of process conditions, higher-quality and larger-sized SiC wafers have gradually entered the market. In 1991, Cree in the United States successfully produced 6H-SiC wafers using the improved Lely method and fabricated 4H-SiC wafers in 1994. Subsequently, in 1997, 50-mm (2-inch) 6H-SiC single crystals entered the market, and in 2000, 100-mm (4-inch) 6H-SiC single crystals were also commercialized. In the second decade of the 21st century, Cree demonstrated high-quality 150-mm SiC substrates in 2010. Currently, the liquid-phase method for growing SiC single crystals has also achieved some commercial application breakthroughs. For example, Tianyue Advanced successfully delivered the world's first 8-inch low-resistance p-type SiC substrate prepared by the liquid-phase method in November 2024, with a resistivity of less than 200 mΩ·cm and zero micropipe defects. Japan's Oxide Company plans to start sampling 8-inch liquid-phase SiC products in February 2025, aiming to meet the requirements of high-voltage and high-power devices.

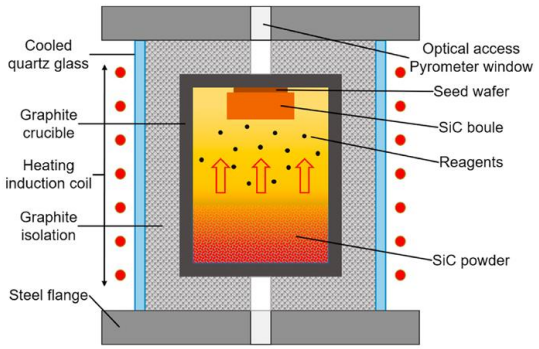

Figure 1: Schematic diagram of SiC single-crystal growth by the PVT method.

2.2. Epitaxial Film Process

In addition to the fabrication of single-crystal substrates, the growth of epitaxial films is also crucial for the manufacturing of SiC devices. The quality of SiC films directly determines the performance and yield of the devices.

Currently, the mainstream SiC film growth process is the chemical vapor deposition (CVD) method. In this method, silicon sources (such as SiH_4,SiH_2Cl_2,etc.) and carbon sources (such as C_2H_2, CH_4, etc.) are used as gaseous precursors. At high temperatures, the chemical bonds of these precursors break, and chemical reactions occur to form SiC. The gaseous precursors are transported to the substrate surface through diffusion and convection and adsorbed. Under the action of the substrate surface atoms, they react to form SiC nuclei, which grow and connect to form a continuous film. From its reaction mechanism, it can be seen that the CVD process has a high degree of freedom and numerous growth parameters, including gas source flow rate, reaction chamber temperature, and gas partial pressure. Therefore, it is challenging to precisely control the optimal reaction conditions. When the control of the reaction process is not precise enough, the uniformity, crystal integrity, and growth rate of the grown film will be affected. This has led researchers to explore the optimal process conditions from the late 20th century to the early 21st century. For example, in 1991, Hiroyuki Nagasawa et al. used the low-pressure chemical vapor deposition (LPCVD) method to grow SiC films on Si substrates and found that the pits and protrusions of the films could be suppressed with the increase of the C2H2 partial pressure [8]. In 1992, A.J. Steckl et al. used the rapid thermal chemical vapor deposition method and achieved a growth rate of 0.5 - 2 nm/s at a temperature of 1100 - 1300°C with a C3H8 flow rate of 7 - 9 standard cubic centimeters per minute. They also found that the growth rate decreased significantly at higher C3H8 flow rates [9]. In 1993, H. Nagasawa et al. studied the

DOI: 10.54254/2755-2721/140/2025.22008

heteroepitaxial growth of 3C-SiC on Si substrates in a hot-wall low-pressure chemical vapor deposition reactor and found that the substrate orientation and growth temperature had an impact on the film growth rate and crystal morphology. The detailed data can be found in reference [10]. In 2008, F. La Via et al. used trichlorosilane (TCS) instead of silane as the precursor in the hot-wall chemical deposition method and achieved a growth rate of 100 μm/h, much higher than the 6 - 8 μm/h growth rate when silane was used as the precursor. Moreover, the Schottky diodes fabricated using TCS had a defect density as low as 5/cm² which is lower than 22.2/cm²[11]. In summary, when preparing SiC films, factors such as gas partial pressure, gas flow rate, reaction chamber temperature, substrate quality, substrate orientation, and precursors all affect the growth quality and rate of SiC films. To reduce the dislocation density and micropipe defects in the epitaxial layer, the micropipe filling process [12] (reducing the micropipe density from 100cm-2 to 10cm-2) the flash lamp annealing process [13] (reducing the defect density by an order of magnitude) have been proposed.

3. Silicon Carbide Devices

3.1. SiC Schottky Diodes

Only composed of a mental and a semiconductor, Schottky barrier diodes is relatively simple. Therefore, they were fabricated earlier than devices such as MOSFETs and IGBTs. Compared with silicon-based Schottky barrier diodes, SiC-based Schottky barrier diodes have a higher breakdown voltage (the bandgap of Si is 1.12 eV, and that of SiC is 3.26 eV) and better high-temperature characteristics (the thermal conductivity of Si is 150 W/mK, and that of SiC is 490 W/mK), which enables them to be more widely used in high-voltage, high-frequency, and high-temperature applications. Some commercially available Schottky diodes with good performance are listed in the following Table 2.

Table 2: The main manufacturers device and the highest level of SiC-SBD

Manufacturers	Type	V_{BR}/V	I_{FMAX}	V_F/V @25℃	$Max\ T$(℃)	I_R/μA @25℃
Infineon	IDWD80G200C5	2000	80A@180℃	1.5	175	40
Wolfspeed	CPW6-1700-Z050A	1700	50A@161℃	1.5	175	1.6
ROHM	SCS240KE2	1200	20A@134℃	1.4	175	20
STMicroelectronics	STPSC40H12C	1200	20A@150℃	1.35	175	10
BASiC Semiconductor	B4D60120H2	1200	60A@155℃	1.42	175	10
CR Micro	CRXQ60D120G2	1200	30A@155℃	1.4	175	5

To give full play to the performance advantages of Schottky barrier diodes, integrating Schottky diodes into other devices to achieve better performance may become a trend. In 2025, Chia-Lung Hung et al. combined the advantages of SiC VDMOSFETs and SBDs and integrated JBS diodes into VDMOSFETs to fabricate JBSFETs, achieving good performance with a threshold voltage of 1.9V, a specific on-resistance of 5.2mΩ cm² and a blocking voltage of 2373V [14].

3.2. SiC BJTs

SiC BJTs are power semiconductor devices based on the bipolar carrier conduction mechanism. They control the large current between the collector and the emitter by controlling the base current. Their structure consists of three layers of semiconductor materials (NPN or PNP type), and they mainly

DOI: 10.54254/2755-2721/140/2025.22008

rely on the injection and recombination of minority carriers to achieve conduction. Compared with SiC MOSFETs, SiC BJTs can achieve a larger current density and lower conduction losses under high voltage [15]. At the same time, without a gate structure, they avoid long-term reliability issues (such as threshold voltage drift) caused by gate oxide interface defects in SiC MOSFETs. Compared with SiC IGBTs, SiC BJTs strike a better balance between switching speed and losses, making them suitable for applications in ultra-high-frequency radar systems [16]. The difficulty in controlling the doping accuracy of the base region leads to a low yield and high cost. To address the problem of low current gain, in 2008, Lee, Hyung-Seokd et al. optimized the structure design. They replaced the traditional ion-implanted base with a regrown external base layer structure, reducing the base contact resistivity and minimizing the current gain loss, and achieving a current gain of $\beta = 42$ [17]. To solve the problem of complex drive circuits, in 2022, Haihong Qin et al. proposed a parameter optimization design method for a dual-power-supply RC drive circuit in view of the complex or unoptimized existing drive schemes for SiC BJTs. Theoretical, simulation, and experimental analyses showed that as the acceleration capacitance increases, the drive loss increases proportionally, the reduction in switching loss is small, and the total switching loss first decreases and then increases. A reasonable selection of the acceleration capacitance can minimize the total switching loss [18].

3.3. SiC MOSFETs

SiC MOSFETs combine the excellent properties of SiC materials and the structural advantages of MOSFETs, showing great potential in modern electronics. Currently, there are two main problems in the application of SiC MOSFETs: the reliability of the gate oxide layer and the high on-resistance caused by unipolar carrier transport. To address the first problem, researchers have effectively improved the reliability of the gate oxide layer by deeply optimizing the annealing process [19] and innovating in the stacking of the gate dielectric layer [20]. Regarding the second problem, researchers have proposed some new structures. The Table 3 shows different 4H - SiC - based MOSFET devices.

Table 3: Performance comparison of different structure MOSFET devices

SiC MOSFETs design	V_{br} (V)	$R_{on}(m\Omega \cdot cm^2)$	Year	Ref
4H-SiC SJ-TMOS	1633	1.14	2019	[21]
4H-SiC T-MOSFET with p +shielding region	1538	1.63	2021	[22]
4H–SiC junctionless planar MOSFET	2676	5.78	2022	[23]
4H-SiC EHCT-MOSFET	3884	20.13	2022	[24]
4H-SiC MOSFETs with deep P-well using ‘channeling’ implantation	1609	3.35	2022	[25]
4H-SiC P-NiO/N-SiC heterotype SJ-MOSFET	1600	0.85	2022	[26]
4H-SiC Trench MOSFET Integrated With Mesa-Sidewall SBD	1993	1.98	2021	[27]
4H-SiC Trench MOSFET Integrated With SBD	1474	1.84	2021	[27]

Among them, superjunction structured MOSFETs, such as those in [25] and [30], exhibit more excellent comprehensive performance. Reference [25] provides the process flow steps of the superjunction structure, as shown in Figure 2.

DOI: 10.54254/2755-2721/140/2025.22008

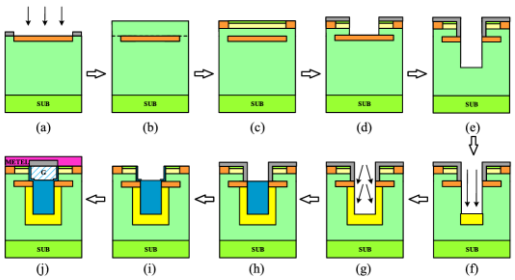

Figure 2: Key fabrication process flows for the SJ-TMOS: (a) Form the P+ buried layer, (b) n-type epitaxial growth (c) form the P+, N+ sources and the P-body, (d) ICP etch to form the shallow trench, (e) ICP etch to form the deep trench, (f) vertical implantation to form the P-region at the bottom of trench, (g) tilted implantation to form the P-region along the sidewall of trench (h) fill the deep trench with SiO2, (i) thermal oxidation to form the gate oxide, (j) deposition the poly silicon and form electrodes[21].

3.4. SiC IGBT

IGBT (Insulated - Gate Bipolar Transistor) is a composite fully controlled voltage driven power semiconductor device composed of a BJT (Bipolar Junction Transistor) and a MOS (Metal - Oxide - Semiconductor). Compared with other power devices such as MOSFETs and BJTs, IGBTs have a lower on - state voltage drop in ultra - high - voltage (> 10 kV) application scenarios due to the conductivity modulation effect of their drift region. However, SiC IGBTs currently face two problems. On the one hand, the manufacturing process of SiC - IGBTs is relatively immature. On the other hand, to meet the requirements of high voltage, the drift region of IGBTs has to be thickened to prevent breakdown, but this will weaken the conductivity modulation effect and thus increase the on - state voltage. To address the first problem, in 2018, Licheng Sun et al proposed a novel Si/SiC heterojunction IGBT structure, which can achieve a breakdown voltage 3 - 4 times that of Si - IGBTs and has a lower on resistance and a higher switching frequency compared with Si - IGBTs [28], achieving a compromise between process and performance. To solve the second problem, researchers started from optimizing the device structure. In 2021, Jinping Zhang et al. proposed a novel injection enhanced silicon carbide (SiC) planar gate insulated gate bipolar transistor (PSE - IGBT) with a partial Schottky contact emitter. The on state voltage drops of PSE IGBTNi and PSE IGBTTi decreased from 6.61 V of Con - IGBT to 5.83 V and 5.48 V, respectively. The turn - off losses at Vceon = 6.4V were 11.15 mJ/cm² and 9.80 mJ/cm², respectively. Which were 47.5% and 53.9% lower than that of Con - IGBT (21.25 mJ/cm²), and the turn - off ability at high temperatures and high currents did not degrade [29].

4. Applications of Silicon Carbide Devices

4.1. High - Temperature Applications of Silicon Carbide Devices

The wide bandgap (3.4 eV) of SiC materials provides high - temperature stability, and the high thermal conductivity (490 W/mK) makes the carrier mobility decay slowly at high temperatures. This means that in some power systems, a cooling system is not required, reducing the overall weight of the system. This is of great significance for some application fields that are sensitive to system weight, such as aerospace. In addition, compared with the upper temperature limit of 150 - 175°C for silicon - based devices, SiC devices can reach 200 - 600°C. Therefore, SiC devices have a wide range of applications in high - temperature scenarios. Recently, some cases of SiC applications in typical high - temperature scenarios have been reported, as shown in the Table 4.

DOI: 10.54254/2755-2721/140/2025.22008

Table 4: Applications of silicon carbide power devices in high - temperature fields

Device type	Application module	Highest operating temperature(℃)	Highest operating frequency(Hz)	Highest operating voltage (V)	Year	Ref
L-JFET	Boost converter	300	5M	400	2008	[30]
JFET	Power conversion module	200		1200	2012	[31]
Ti/AI-4H-SiC SBD	Temperature sensor	300			2016	[32]
p-i-n diode	Temperature sensor	300			2016	[32]
BJT	Operational amplifier and integrator	500	250M		2017	[33]
V2O5-4H-SiC SBD	Temperature sensor	152			2018	[34]
NMOSFET/PMOSFET	Common - source amplifier and differential amplifier	300			2023	[35]
MOSFET	Bidirectional switch module	200		900	2023	[36]

As shown in the Table 4, the highest operating temperature of SiC devices can reach 500°C, but the theoretical temperature limit of SiC materials is much higher. This is limited by the corresponding packaging technology and thermal management technology.

4.2. High - Voltage Applications of Silicon Carbide Devices

Under the same breakdown voltage, the on - resistance of SiC is only 1/600 that of silicon. The on - resistance represents the magnitude of the current - blocking effect of power devices in the on state. In high voltage power conversion circuits, a low on resistance can effectively reduce energy losses and improve circuit efficiency. In high - voltage switching circuits, it can effectively increase the switching speed. This intuitively demonstrates the huge advantage of SiC - based power devices over silicon - based power devices in high voltage fields. In 2019, Guoyou Liu et al fabricated and tested a 3.3 kV SiC power module and compared the performances of SiC MOSFETs and silicon IGBTs, as shown in Figure 3 and Figure 4 [37].

DOI: 10.54254/2755-2721/140/2025.22008

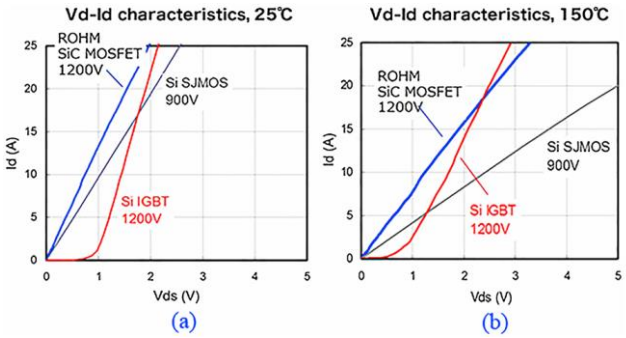

Figure 3: Temperature dependent performance comparison between SiC and Si based device.

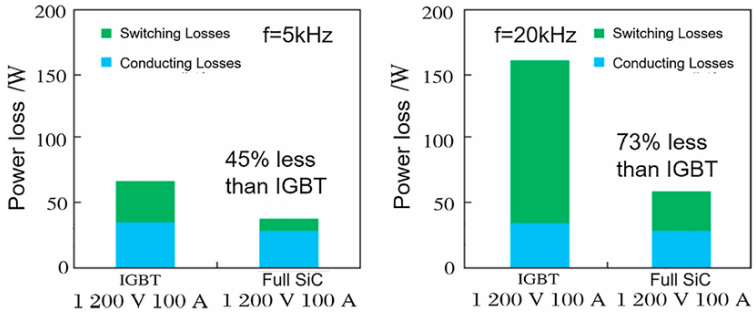

Figure 4: Power losses of IGBT and All-SiC.

Currently, the promotion of SiC devices still faces some challenges, such as high manufacturing costs and high defect densities. In the future, process technologies can be further improved and optimized to pave the way for the widespread application of SiC power devices.

4.3. High - Frequency Applications of Silicon Carbide Devices

The electron saturation velocity of SiC ranges from 2×10^7 - 3×10^7cm/s, which is 2 - 3 times that of silicon (the electron saturation drift velocity of silicon is approximately 1×10^7cm/s). Therefore, SiC devices are popular in some high - frequency fields, such as photovoltaic inverters and new energy vehicle inverters. In the field of photovoltaic inverters, in 2017, Yuji Ando et al. developed a 150 W compact photovoltaic inverter based on SiC devices. This inverter integrated a maximum power point tracking charge controller and a DC - AC converter into one module. By increasing the switching frequency, the module size was reduced (currently 1/3 of that of commercial silicon - based inverters), and the conversion efficiency of the DC - AC converter was approximately 3% higher than that of silicon - based inverters. The conversion efficiency of the maximum power point tracking controller exceeded 96%, resulting in a total efficiency of up to 86% under actual operating conditions [4]. Figure 5 shows the physical diagram of the photovoltaic inverter manufactured by this team.

DOI: 10.54254/2755-2721/140/2025.22008

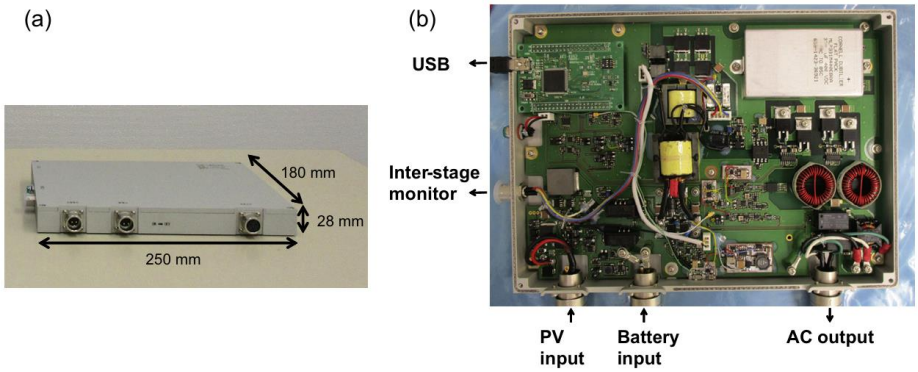

Figure 5: (a) Photographs of the developed photovoltaic power module. (b) The DC-AC converter circuit with an MPPT controller (SiC inverter 2).

SiC has a leading advantage in high - voltage and high - frequency fields. However, in low - voltage and high - frequency fields, gallium nitride (GaN) high - electron - mobility transistors (HEMTs) have more advantages, which rely on the high mobility and saturated electron velocity of the two - dimensional electron gas formed by the heterojunction of GaN HEMTs.

5. Conclusion

As a new generation of power semiconductor devices, SiC devices exhibit great development potential in modern electronics. From the perspective of material growth, the PVT method is currently the mainstream single - crystal growth method, but it has the disadvantages of slow growth rate and high cost. The liquid - phase method has advantages such as low growth temperature, high crystal quality, easy doping control, and convenient diameter expansion, but it also faces challenges such as difficult solvent pollution control and insufficient process stability. Both methods need to be further optimized. In terms of epitaxial film processes, the CVD method is the mainstream, but it is difficult to precisely control the reaction conditions. In the aspect of device performance improvement, different types of SiC devices, such as Schottky diodes, BJTs, MOSFETs, and IGBTs, all face their own challenges, such as gate oxide reliability, high on - resistance, and complex drive circuits. Although researchers have made some progress through means such as structural design optimization and the introduction of new materials, continuous in-depth research is still required to achieve a comprehensive breakthrough in device performance. In the application field, SiC devices, with their high - temperature stability, high breakdown field strength, and high electron saturation velocity, show unparalleled advantages over traditional silicon - based devices in high - temperature, high - voltage, and high - frequency scenarios. However, their widespread application is still limited by high manufacturing costs and large defect densities. Looking to the future, to promote the further development of SiC devices, it is necessary to focus on innovating material growth processes to reduce costs and improve crystal quality, continuously optimize device structures and performances to solve existing technical problems, and strengthen research on packaging technology and thermal management technology to fully exert the potential of SiC devices. With the continuous progress of technology, SiC devices are expected to achieve large - scale applications in more fields, promoting the upgrading and development of related industries.

References

[1] *D. Kruangam, T. Toyama, Y. Hattori, M. Deguchi, H. Okamoto, and Y. Hamakawa, "Improvement of carrier injection efficiency in a-SiC p-i-n LED using highly-conductive wide-gap p, n type a-SiC prepared by ECR CVD," J Non Cryst Solids, vol. 97–98, pp. 293–296, Dec. 1987, doi: 10.1016/0022-3093(87)90070-6.*

[2] Y. Hamakawa, D. Kruangam, M. Deguchi, Y. Hattori, T. Toyama, and H. Okamoto, "Visible light thin film LED made of a-SiC p-i-n junction," Appl Surf Sci, vol. 33–34, pp. 1142–1150, Sep. 1988, doi: 10.1016/0169-4332(88)90428-X.

[3] S. Kaneda, Y. Sakamoto, T. Mihara, and T. Tanaka, "MBE growth of 3C·SiC/6·SiC and the electric properties of its p-n junction," J Cryst Growth, vol. 81, no. 1–4, pp. 536–542, Feb. 1987, doi: 10.1016/0022-0248(87)90449-0.

[4] Y. Ando, T. Oku, M. Yasuda, Y. Shirahata, K. Ushijima, and M. Murozono, "A compact SiC photovoltaic inverter with maximum power point tracking function," Solar Energy, vol. 141, pp. 228–235, Jan. 2017, doi: 10.1016/j.solener.2016.11.041.

[5] M. Ostling, R. Ghandi, and C.-M. Zetterling, "SiC power devices — Present status, applications and future perspective," in 2011 IEEE 23rd International Symposium on Power Semiconductor Devices and ICs, IEEE, May 2011, pp. 10–15. doi: 10.1109/ISPSD.2011.5890778.

[6] W. S. Yoo, S. Nishino, and H. Matsunami, "Single crystal growth of hexagonal SiC on cubic SiC by intentional polytype control," J Cryst Growth, vol. 99, no. 1–4, pp. 278–283, Jan. 1990, doi: 10.1016/0022-0248(90)90527-R.

[7] R. F. Davis, J. W. Palmour, and J. A. Edmond, "Epitaxial thin film growth, characterization and device development in monocrystalline α- and β-silicon carbide," Diam Relat Mater, vol. 1, no. 2–4, pp. 109–120, Mar. 1992, doi: 10.1016/0925-9635(92)90009-D.

[8] M. Musolino et al., "Paving the way toward the world's first 200mm SiC pilot line," Mater Sci Semicond Process, vol. 135, p. 106088, Nov. 2021, doi: 10.1016/j.mssp.2021.106088.

[9] A. J. Steckl and J. P. Li, "Rapid thermal chemical vapor deposition growth of nanometer-thin SiC on silicon," Thin Solid Films, vol. 216, no. 1, pp. 149–154, Aug. 1992, doi: 10.1016/0040-6090(92)90886-G.

[10] H. Nagasawa and Y. Yamaguchi, "Atomic level epitaxy of 3C-SiC by low pressure vapour deposition with alternating gas supply," Thin Solid Films, vol. 225, no. 1–2, pp. 230–234, Mar. 1993, doi: 10.1016/0040-6090(93)90160-Q.

[11] F. La Via et al., "4H-SiC epitaxial layer growth by trichlorosilane (TCS)," J Cryst Growth, vol. 311, no. 1, pp. 107–113, Dec. 2008, doi: 10.1016/j.jcrysgro.2008.10.041.

[12] V. Dmitriev et al., "Large area silicon carbide devices fabricated on SiC wafers with reduced micropipe density," Materials Science and Engineering: B, vol. 61–62, pp. 446–449, Jul. 1999, doi: 10.1016/S0921-5107(98)00552-2.

[13] M. Smith, R. A. McMahon, M. Voelskow, W. Skorupa, and J. Stoemenos, "Regrowth mechanisms in flash lamp processing of heteroepitaxial SiC on silicon substrates," J Cryst Growth, vol. 277, no. 1–4, pp. 162–169, Apr. 2005, doi: 10.1016/j.jcrysgro.2005.02.008.

[14] C.-L. Hung, Y.-K. Hsiao, J.-N. Yao, and H.-C. Kuo, "Well-balanced 4H-SiC JBSFET: Integrating JBS diode and VDMOSFET characteristics for reliable 1700V applications," Solid State Electron, vol. 226, p. 109083, Jun. 2025, doi: 10.1016/j.sse.2025.109083.

[15] A. Q. Huang and B. Zhang, "Comparing SiC switching power devices: MOSFET, NPN transistor and GTO thyristor," Solid State Electron, vol. 44, no. 2, pp. 325–340, Feb. 2000, doi: 10.1016/S0038-1101(99)00239-7.

[16] F. Zhao, "71W (19.7W/mm) SiC BJTs for long-pulse UHF radar applications," Solid State Electron, vol. 53, no. 11, pp. 1169–1172, Nov. 2009, doi: 10.1016/j.sse.2009.07.008.

[17] H.-S. Lee, M. Domeij, R. Ghandi, C.-M. Zetterling, and M. Ostling, "High-Current-Gain SiC BJTs With Regrown Extrinsic Base and Etched JTE," IEEE Trans Electron Devices, vol. 55, no. 8, pp. 1894–1898, Aug. 2008, doi: 10.1109/TED.2008.926645.

[18] H. Qin, J. Peng, S. Xie, Y. Mo, Q. Xiu, and W. Chen, "Switching characteristics analysis and power loss minimization of SiC BJT based on dual power supply RC driving circuit," Energy Reports, vol. 8, pp. 710–720, Nov. 2022, doi: 10.1016/j.egyr.2022.05.204.

[19] Z. Peng et al., "Effects of combined NO and forming gas annealing on interfacial properties and oxide reliability of 4H-SiC MOS structures," Microelectronics Reliability, vol. 58, pp. 192–196, Mar. 2016, doi: 10.1016/j.microrel.2015.11.022.

[20] V. Pavan Kumar Reddy and S. Kotamraju, "Improved device characteristics obtained in 4H-SiC MOSFET using high-k dielectric stack with ultrathin SiO2-AlN as interfacial layers," Mater Sci Semicond Process, vol. 80, pp. 24–30, Jun. 2018, doi: 10.1016/j.mssp.2018.02.012.

[21] Q. He et al., "4H-SiC superjunction trench MOSFET with reduced saturation current," Superlattices Microstruct, vol. 125, pp. 58–65, Jan. 2019, doi: 10.1016/j.spmi.2018.10.016.

[22] H. Fu et al., "1200V 4H-SiC trench MOSFET with superior figure of merit and suppressed quasi-saturation effect," Microelectronics Reliability, vol. 123, p. 114249, Aug. 2021, doi: 10.1016/j.microrel.2021.114249.

[23] B. Zerroumda, F. Djeffal, S. Benaggoune, and H. Ferhati, "Performance assessment of a novel 4H–SiC junctionless planar power MOSFET towards improving electrical properties," Micro and Nanostructures, vol. 169, p. 207346, Sep. 2022, doi: 10.1016/j.micrna.2022.207346.

[24] L. Zhang, T. Dai, P. Gammon, V. Shah, P. Mawby, and M. Antoniou, "Comparison of a 3.3 kV SiC Hybrid-Channel Trench MOSFET and a Planar MOSFET," in 2022 IEEE Workshop on Wide Bandgap Power Devices and

Applications in Europe (WiPDA Europe), IEEE, Sep. 2022, pp. 1–4. doi: 10.1109/WiPDAEurope55971.2022.9936559.

[25] *D. Kim, S. Y. Jang, A. J. Morgan, and W. Sung, "Implementation of a short channel (0.3 μm) for 4H-SiC MOSFETs with deep P-well using 'channeling' implantation," in 2022 IEEE 34th International Symposium on Power Semiconductor Devices and ICs (ISPSD), IEEE, May 2022, pp. 217–220. doi: 10.1109/ISPSD49238.2022.9813633.*

[26] *M. Kong, S. Li, Z. Cheng, N. Yu, B. Yi, and S. Gong, "A Novel Heterotype SiC Superjunction MOSFET With Improved Both Forward and Reverse Performance," in 2022 IEEE 16th International Conference on Solid-State & Integrated Circuit Technology (ICSICT), IEEE, Oct. 2022, pp. 1–4. doi: 10.1109/ICSICT55466.2022.9963437.*

[27] *Z. Han et al., "A Novel 4H-SiC Trench MOSFET Integrated With Mesa-Sidewall SBD," IEEE Trans Electron Devices, vol. 68, no. 1, pp. 192–196, Jan. 2021, doi: 10.1109/TED.2020.3037882.*

[28] *L. Sun, B. Duan, X. Yang, Y. Wang, and Y. Yang, "Analysis of the novel Si/SiC heterojunction IGBT characteristics by TCAD simulation," Superlattices Microstruct, vol. 122, pp. 631–635, Oct. 2018, doi: 10.1016/j.spmi.2018.06.031.*

[29] *J. Zhang, Y. Tu, J. Luo, Z. Peng, X. Deng, and B. Zhang, "Injection enhanced SiC planar gate IGBT with partial Schottky contact emitter," Mater Sci Semicond Process, vol. 134, p. 106026, Nov. 2021, doi: 10.1016/j.mssp.2021.106026.*

[30] *L. C. Yu, K. Sheng, and J. H. Zhao, "Modeling and design of a monolithically integrated power converter on SiC," Solid State Electron, vol. 52, no. 10, pp. 1625–1630, Oct. 2008, doi: 10.1016/j.sse.2008.06.020.*

[31] *D. Othman, M. Berkani, S. Lefebvre, A. Ibrahim, Z. Khatir, and A. Bouzourene, "Comparison study on performances and robustness between SiC MOSFET & JFET devices – Abilities for aeronautics application," Microelectronics Reliability, vol. 52, no. 9–10, pp. 1859–1864, Sep. 2012, doi: 10.1016/j.microrel.2012.06.078.*

[32] *S. Rao, G. Pangallo, and F. G. Della Corte, "An Experimental Study on the Performance of Two Temperature Sensors Based on 4H-SiC Diodes," Procedia Eng, vol. 168, pp. 729–732, 2016, doi: 10.1016/j.proeng.2016.11.262.*

[33] *Y. Tian and C.-M. Zetterling, "High frequency characteristic of a monolithic 500 °C OpAmp-RC integrator in SiC bipolar IC technology," Solid State Electron, vol. 135, pp. 65–70, Sep. 2017, doi: 10.1016/j.sse.2017.06.002.*

[34] *S. Rao, G. Pangallo, L. Di Benedetto, A. Rubino, G. D. Licciardo, and F. G. Della Corte, "A V2O5/4H-SiC Schottky diode-based PTAT sensor operating in a wide range of bias currents," Sens Actuators A Phys, vol. 269, pp. 171–174, Jan. 2018, doi: 10.1016/j.sna.2017.11.026.*

[35] *T. zhenyu, T. Xiaoyan, Z. Yimeng, Z. Pu, S. Yuyin, and Z. Yuming, "4H-SiC integrated circuits for high-temperature applications," J Cryst Growth, vol. 605, p. 127060, Mar. 2023, doi: 10.1016/j.jcrysgro.2022.127060.*

[36] *Y. Lee and A. Castellazzi, "High-temperature integrated SiC MOSFET bi-directional switch in power-overlay technology," Microelectronics Reliability, vol. 151, p. 115223, Dec. 2023, doi: 10.1016/j.microrel.2023.115223.*

[37] *G. Liu, Y. Wu, K. Li, Y. Wang, and C. Li, "Development of high power SiC devices for rail traction power systems," J Cryst Growth, vol. 507, pp. 442–452, Feb. 2019, doi: 10.1016/j.jcrysgro.2018.10.037.*