Proceedings of the 3rd International Conference on Mechatronics and Smart Systems
DOI: 10.54254/2755-2721/125/2025.21254

Research on the Complementary Characteristics of New Energy in China

Yuyao Wu[1,a,*]

[1]*North China Electric Power University, Beijing City, 102206, China*
a. 120221010504@ncepu.edu.cn
**corresponding author*

Abstract: This paper explores the resource endowment and the implementation plans of multi-energy complementarity for new energy power generation in China, aiming to enhance the on-site consumption rate of renewable energy. With the promotion of the "Dual Carbon" policy, China's energy landscape has shifted significantly. The article analyzes the distribution of resources and energy consumption characteristics of solar, wind, biomass, ocean, and geothermal energy in different regions and proposes multi-energy coordinated power generation plans based on these characteristics. The study finds that leveraging the complementarity between different renewable energies can significantly improve power generation efficiency and promote the rational use and consumption of renewable energy.

Keywords: New energy power generation, Multi-energy complementarity, Resource endowment

1. Introduction

With the continued implementation of the "Dual Carbon" policy, China has witnessed a rapid transition towards clean energy. As of June 2024, the installed capacity of new energy power generation has for the first time surpassed that of coal power, with the proportion of clean energy consumption reaching 26.4%. The issue of on-site consumption of new energy has become a nationwide research hotspot. How to achieve multi-energy coordinated power generation based on renewable energy generation laws and considering the resource endowment and load characteristics of various regions in China, in order to improve the on-site consumption rate of regional renewable energy, is a key issue in the current planning and construction of new energy.

Given the intermittent, random, and fluctuating nature of these renewable energy sources, the question of how to achieve multi-energy complementarity to improve energy efficiency and stability has become a research hotspot in energy systems. Reference [1] reviewed the research progress of multi-energy complementary systems based on solar energy, analyzing the complementarity of solar-wind, solar-hydro, and solar-biomass systems. It highlighted their enormous potential in solving power supply issues in remote areas and enhancing system stability. Reference [2] proposed an optimal design model for a wind-solar complementary power system by constructing a dual-layer optimization model to determine the optimal ratio and capacity configuration of wind and solar power. Reference [3] built a multi-energy complementary system that utilizes cascading thermal energy storage, integrating solar energy and the grid to supply electricity and provide both heating and cooling. To address the issue of electricity consumption during peak generation periods, reference [4]

© 2025 The Authors. This is an open access article distributed under the terms of the Creative Commons Attribution License 4.0 (https://creativecommons.org/licenses/by/4.0/).

DOI: 10.54254/2755-2721/125/2025.21254

introduced hydrogen production into a hydro-wind-solar hybrid power system and developed a multi-layer joint scheduling model that effectively consumes surplus electricity and reduces the volatility of hydropower units. Reference [5] considers the introduction of energy storage and compares the applications of pumped hydro storage (LCHES) and battery energy storage (HWPBS) in hydro-wind-solar hybrid systems (HWPS), concluding that LCHES is more efficient in multi-energy complementarity.

Although the above literature has conducted related research on multi-energy complementarity and renewable energy consumption, none of them have formulated multi-energy coordinated plans based on the resource endowment and load characteristics of specific regions or considered the issue of on-site consumption of renewable energy in specific regions. Reference [6] addresses the issue of intermittent renewable energy supply on a specific island in China by developing a multi-energy complementary system that integrates wind energy, photovoltaics, hydrogen production, and storage. Reference [7] employs an entropy-TOPSIS model for comprehensive evaluation to assess the operational modes of multi-energy complementary heating systems (MECHS) in rural areas. It concludes that the solar-biomass energy mode performs best in heating efficiency and environmental benefits in the Tumxuk region of Northwest China. Reference [8] proposes a multi-energy complementary absorption cooling system (ASCCH) to address the heating and cooling demands in regions with cold winters and hot summers. The system integrates solar energy, biomass, and natural gas, balancing energy supply through thermal storage and energy complementarity, thereby achieving efficient cooling and heating functions.

From the analysis of the above literature, it can be concluded that the research on regional multi-energy coordination is still in its infancy. Proposing targeted multi-energy complementarity solutions with regional characteristics based on the resource endowment of different regions is a hot research topic. This paper first outlines the resource situation of various new energy sources such as wind, solar, ocean, biomass and geothermal energy in China. It then elaborates on the theory of complementarity of various new energy generation sources and analyzes the impact of coordinated generation. Finally, it selects the typical region of Inner Mongolia in northern China, which is rich in wind resources, and develops a multi-energy coordinated solution based on local new energy resource conditions and electricity load characteristics to promote on-site consumption of new energy.

2. Resource Endowment of New Energy

2.1. Wind Energy

China's most valuable wind energy resources are concentrated in the "Three North" region, including northern Gansu, Xinjiang's Hami area, Xilingol League, and parts of Inner Mongolia and Heilongjiang. These regions are sparsely populated, with low electricity demand, making them ideal for large-scale centralized wind power development and export. Coastal areas like the Shandong Peninsula and the Taiwan Strait, with closer proximity to power consumption centers, are better suited for local wind energy use. However, these areas are limited in available space and are often affected by extreme weather, making decentralized wind power distribution more feasible.

2.2. Solar Energy

Based on the reference [9], this paper evaluates the suitability for on-site consumption of solar power in regions with moderate to abundant solar resources. Regions like Ningxia, possessing abundant solar resources and relatively high local energy consumption, are recommended to utilize their abundant solar resources on-site. In contrast, regions such as Tibet and Xinjiang are more suitable for large-scale centralized photovoltaic development and power export.

DOI: 10.54254/2755-2721/125/2025.21254

Table 1: Classification of Regions for On-Site Solar Energy Consumption.

Region Category	Annual Radiation (MJ/m^2)	Annual Sunshine Hours (h)	Effective Sunshine Days (d)	Electricity Consumption[10] (MWh/km^2)	Major Distribution Areas
Category 1 (Highly Suitable)	5852 –8360	3000 –3300	260–340	>150	Ningxia, northwestern Hebei, northern Shanxi
Category 2 (Suitable)	5016 –5852	2200 –3000	230–260	>100	Liaoning, Shandong, Henan, southeastern Hebei, southern Shanxi, northern Shaanxi, southern Guangdong, southern Fujian, northern Jiangsu, northern Anhui
Category 3 (Export Area)	5852 –8360	3000 –3300	260–340	<50	Tibet, southern Xinjiang, central and northern Gansu, eastern Qinghai, southern Inner Mongolia
Category 4 (Usable Area)	5016 –5852	2200 –3000	230–260	<50	Heilongjiang, Jilin, northern Xinjiang, southern Gansu

2.3. Ocean Energy

China currently primarily utilizes tidal energy and tidal current energy for power generation. Tidal energy is concentrated in Fujian and Zhejiang, which are located in China's economically developed, high-energy-consumption regions, making them suitable for local tidal energy utilization. Hangzhou Bay and the Zhoushan Islands have high tidal current energy density, offering significant development potential. Wave energy, ocean thermal energy, and salinity gradient energy in China are still in the research stage. Overall, Zhejiang, Fujian, Guangdong, and Taiwan are key regions for ocean energy development, well-suited for localized ocean energy power generation.

2.4. Biomass Energy

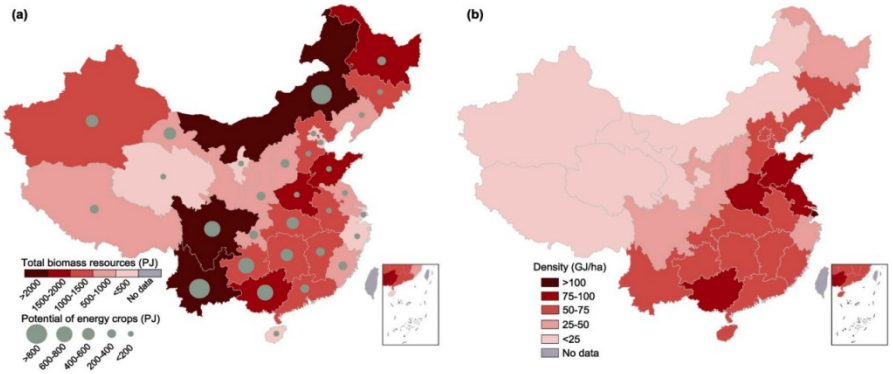

Figure 1: The total potential of China's biomass resources including energy crops (a) and their density (b) in 2016 [11].

DOI: 10.54254/2755-2721/125/2025.21254

Based on reference [11], regions like Heilongjiang and Sichuan demonstrate high biomass potential, primarily derived from agricultural and forestry residues. Provinces such as Shandong and Henan exhibit the highest biomass density (>100 GJ/ha), reflecting intensive agricultural activities. Therefore, large-scale development of biomass resource should be prioritized in the northern and southwestern regions, while the eastern areas should focus on efficient, localized utilization.

2.5. Geothermal Energy

China's high-temperature geothermal zones are primarily located in Tibet, western Sichuan, and Yunnan, while medium- and low-temperature geothermal zones are distributed across North China and the southeast coast. High-temperature regions, such as Yangbajain and Tengchong, with high heat flow (>65 mW/m²), are well-suited for geothermal power generation for external supply, whereas medium- and low-temperature zones are better suited for localized heating and power generation.

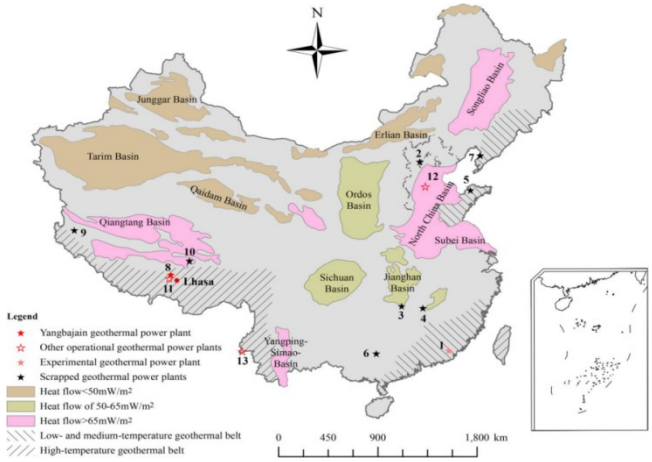

Figure 2: Distribution of geothermal resources and geothermal power development in China as of 2018 [12].

3. Analysis of Complementarity of New Energy

3.1. Wind-Solar Complementarity Analysis

Generally speaking, photovoltaic (PV) power generation occurs during the daytime, with output particularly high around noon. Wind power begins to increase in the evening, gradually surpassing PV output. Wind and solar energy can complement each other in power generation, but the overall generation of wind-solar systems at night still remains far lower than the total generation during the day.

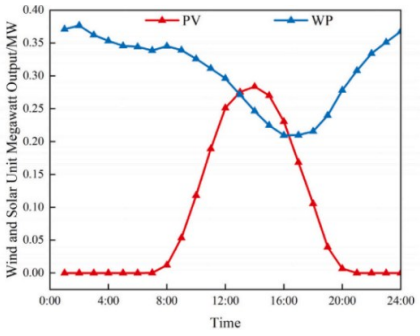

Figure 3: Wind and solar typical operating condition characteristics curve[2].

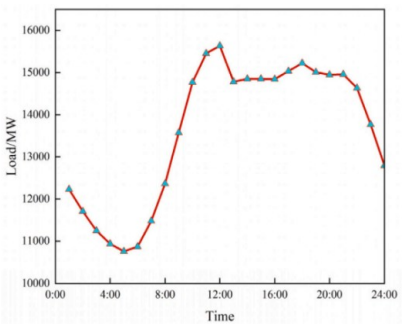

Figure 4: Typical user load[2].

DOI: 10.54254/2755-2721/125/2025.21254

Considering variations in weather conditions, reference [13] utilized complementary evaluation metrics, such as the fluctuation complementarity rate, to quantitatively assess the complementarity between wind and solar output under various weather types. The study concluded that adjusting the wind-solar grid connection capacity ratio can enhance complementarity, reduce joint output fluctuations, and improve the capacity reliability of power generation systems.

Due to climate influence, the complementarity of wind and solar energy also varies across different regions. A study by [14] pointed out that, in the spatial dimension of China, the northwest, northeast, and some areas of the southwest exhibit strong complementarity. Among these, the northwest region is particularly suitable for the development of hydro-wind-solar hybrid systems.

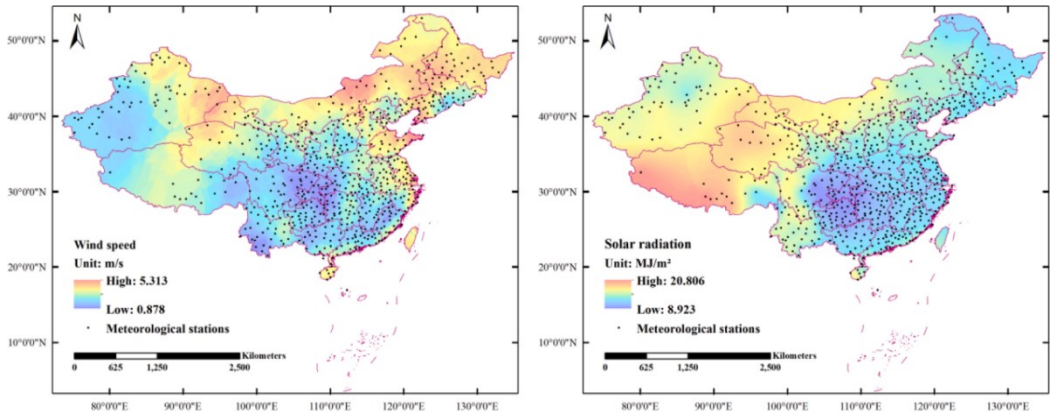

(a) wind resource (b) solar resource

Figure 5: Spatial distribution of wind and solar resources in China[14].

3.2. Wind-Solar Complementary Hydrogen Production and Energy Storage

Wind-solar complementary power generation takes advantage of the temporal and spatial complementarity of wind and solar energy, effectively smoothing out the fluctuations in wind and PV output. Based on this, Bo Zheng [15] and others combined the technical features of alkaline electrolysis cells (AEL) and proton exchange membrane electrolysis cells (PEMEL) for hydrogen production, constructing a multi-type electrolysis collaborative wind-solar complementary hydrogen production system, which further improved the adaptability of the hydrogen production module to fluctuating wind-solar output. The power generation module converts solar radiation and wind energy into electrical energy through photovoltaic arrays and wind turbines, respectively. The hydrogen production module are driven by clean wind-solar electricity to produce high-quality hydrogen, thus realizing chemical energy storage.

The wind turbine converts the wind energy captured by the rotor into electrical energy. The output wind power P_{WT} can be expressed by the following equation:

$$P_{WT} = \frac{1}{2} C_P \rho S v^3 \tag{1}$$

Where v is the real-time wind speed, ρ is the air density, S is the area of the wind turbine blades, and C_P is the power coefficient of the wind turbine.

Photovoltaic power generation uses the photovoltaic effect of solar cells to convert solar radiation into electrical energy. Based on the voltage-current characteristics of the photovoltaic cells, the photovoltaic power generation is given by the following equation:

$$P_{PV} = V_{PV} \times I_{SC}(1 - C_1\{\exp[\frac{V_{PV}}{C_2 V_{oc}}] - 1\}) \tag{2}$$

DOI: 10.54254/2755-2721/125/2025.21254

Where C_1 and C_2 are adjustment coefficients for the V-I characteristics, with values depending on the parameters of the solar cells, such as maximum current, maximum voltage, and so on.

The hydrogen production rate n_{H2} of AEL and PEMEL electrolysis cells is expressed as follows:

$$n_{H_2} = \eta_F \frac{N_{el} I_{el}}{zF} \tag{3}$$

Where N_{el} is the number of electrolysis cell units, η_F is the Faraday efficiency, and F is the Faraday constant.

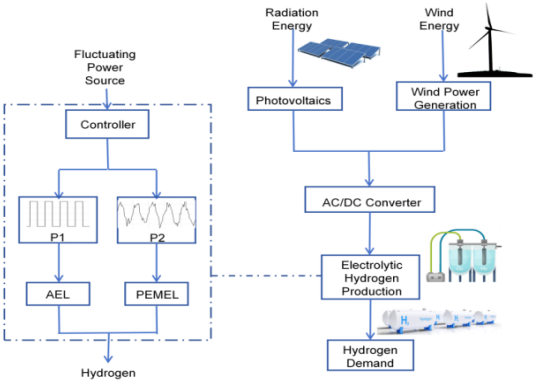

Figure 6: Multi-type Electrolysis Collaborative Wind-Solar Complementary Hydrogen Production System[15].

3.3. Biomass Energy and Combined Heat, Power, and Cooling (CCHP) Coupling System

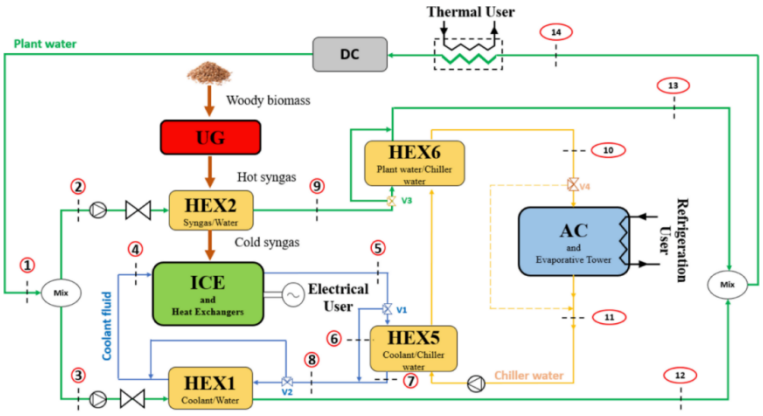

Figure 7: Thermal layout of the biomass based CCHP plant[16].

Compared to solar energy, wind energy, and other resources, biomass energy has the advantage of being transportable and storable. It can easily achieve efficient and stable output of heat, power, and cooling, overcoming the problem of poor system stability due to the inherent temporal and spatial instability of renewable energy sources like solar and wind.

The biomass-based combined heat, power, and cooling (CCHP) system includes three energy balance relationships [17]:

(1) Electricity Balance:

$$E_{grid} + W = E + E_{ec} \tag{4}$$

DOI: 10.54254/2755-2721/125/2025.21254

Where E_{grid} is the electricity obtained from the external grid kW ·, W is the electricity produced by the system generator kW ·, E is the system's electricity load (kW · h), and E_{ec} is the electricity consumed by the system's compression refrigeration unit (kW · h).

(2) Cooling Balance:

$$Q_c = Q_{ac} + Q_{ec} \tag{5}$$

Where Q_c is the system's cooling load (kJ), Q_{ac} is the cooling produced by the compression refrigeration unit (kJ), and Q_{ec} is the cooling provided by the absorption refrigeration unit (kJ).

(3) Heating Balance:

$$Q_s + Q_{rh} = Q_h \tag{6}$$

Where Q_s is the heat generated by the auxiliary boiler (kJ), Q_{rh} is the heat recovered by the waste heat boiler (kJ), and Q_h is the system's heating load (kJ).

Based on the analysis in the first part of this paper, regions with limited wind and solar resources but abundant biomass resources, such as Heilongjiang, Jilin and Sichuan, are suitable for coupling the CCHP system with biomass energy utilization technologies for power generation.

3.4. Complementary Models Considering Geothermal Energy

Geothermal energy can be combined with solar energy, biomass energy, and other renewable sources to enhance energy efficiency. The geothermal-solar system addresses the drawbacks of standalone solar power generation, such as high costs, discontinuous generation, and unstable output, as well as the challenges of generating from low to medium-temperature geothermal systems, including high difficulty, low efficiency, and low energy quality. Zhi Geng's design [18] combines four subsystems: solar energy collection components, heat storage devices, organic Rankine cycle basic power conversion modules, and geothermal-driven reverse Carnot cycle heat pump modules (referred to as geothermal units). The solar unit serves both power generation and heating, while waste heat is used to improve geothermal heating efficiency for winter needs.

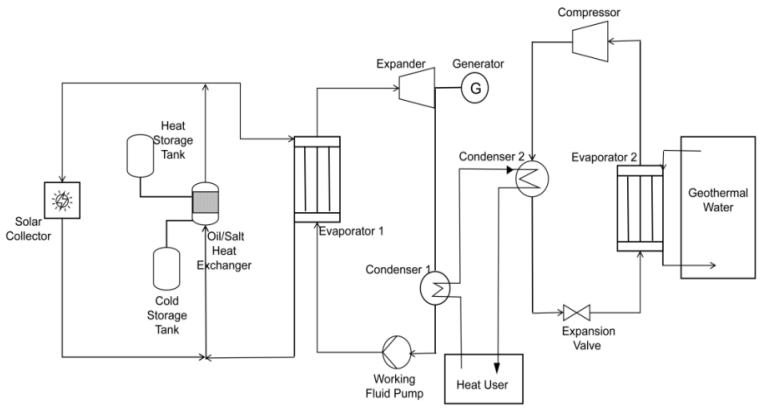

Figure 8: Solar-Geothermal Coupled Heating System Structure Diagram[18].

The geothermal-biomass system fully utilizes the high temperature advantage of biomass energy. Xuefei Lv et al. [19] proposed a cogeneration system integrating biomass gasification with recompression Brayton (RBC) and supercritical CO_2 Brayton cycles (S-CO_2), alongside geothermal flash-binary (FBGC) and organic Rankine cycles (ORC) for waste heat recovery, optimized via MOPSO. Tao Hai et al. [20] compared two hybrid geothermal-biomass configurations: one using geothermal heat for feedwater preheating, the other injecting geothermal steam into a low-pressure

DOI: 10.54254/2755-2721/125/2025.21254

turbine. The latter achieved 8.65% higher exergy efficiency and 12.5% lower environmental impact, offering insights for low-carbon energy integration.

4. Case Analysis

The Inner Mongolia Mengxi region is rich in wind energy resources; however, due to limited local consumption capacity, wind curtailment has been a long-standing issue. In a 1 GW wind farm, the wind curtailment rate reaches as high as 50%. To improve the utilization efficiency of wind power, this paper proposes a wind curtailment utilization system based on thermal energy storage technology. By integrating wind power generation, thermal energy storage, and multi-scenario energy applications, the system enables the efficient conversion and utilization of curtailed wind power.

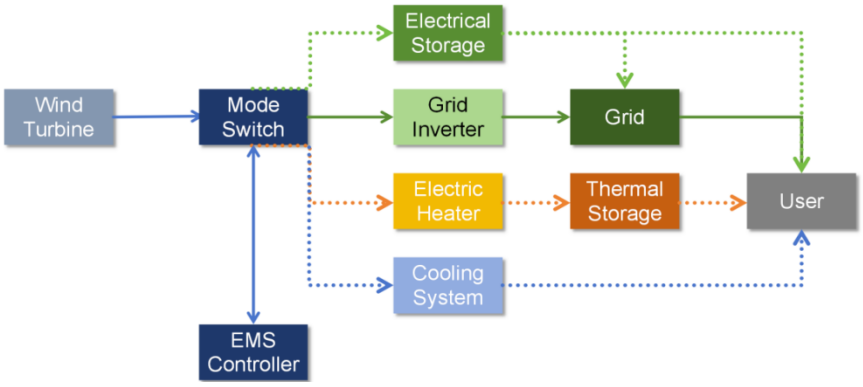

Figure 9: A Wind Power Curtailment Utilization System Based on Thermal Energy Storage Technology.

The system consists of a wind power generation system, an electric heating device, thermal energy storage units, a control system, a summer cooling module, and a grid connection switching module. The wind power generation system collects wind energy using existing wind turbines, satisfying the grid's demand while providing excess electricity to the backend system. The electric heating device converts curtailed wind power into heat through an electric heating boiler and stores the thermal energy in a heat storage tank or solid-state thermal storage device for peak heating or other uses. During non-heating periods, the curtailed wind power drives an absorption chiller, converting the thermal energy into cooling, achieving flexible seasonal energy storage. The grid optimization module interacts with the power grid to ensure that the wind curtailment rate is minimized.

In the summer non-heating period, most wind turbines are connected to the grid through inverters, generating electricity that is primarily fed to the grid. If there is excess power or during low electricity price periods, the surplus power can be delivered to local storage systems or directly sold to the grid. Based on user demand, some wind turbines can be kept off the grid, supplying electricity directly to the cooling system to meet production and living needs. This grid connection mode avoids idling or curtailing the wind turbines during the summer when there is no heating demand. It also allows for selling electricity to the grid or exchanging energy with the grid, thereby improving wind turbine utilization efficiency. When the heating season begins, considering the climatic conditions in the Mengxi region, which require large amounts of thermal energy in winter, the wind turbines switch to an off-grid mode and directly supply electricity to local electric heating devices or heat pumps, bypassing the grid. This reduces the impact on the grid and minimizes complex scheduling on the grid side. It also avoids transmission losses, converting wind power locally into thermal energy. This transformation of "wind curtailment" risk into heating benefits significantly reduces the pressure of wind power consumption.

DOI: 10.54254/2755-2721/125/2025.21254

The switching device can be set to automatic or manual modes, triggered by seasonal changes or electricity price signals. The control system can dynamically determine whether to operate in grid-connected power generation mode during the summer or off-grid heating mode during the winter, or switch flexibly between modes during transitional seasons, based on grid load, electricity prices, weather, and wind power forecasts. The decision-making priority is to first meet heating demand during the winter heating season, with wind power supplying electricity directly to the electric heating device or heat pump. Excess electricity is stored for later use, with remaining power sold to the grid. During the summer non-heating period, wind power is prioritized for grid sales to generate economic benefits, while some wind power is used for direct cooling or stored for peak periods.

In terms of dynamic scheduling, advanced optimization algorithms such as linear programming, mixed-integer programming, and dynamic programming can be used to dynamically calculate the optimal operation strategy based on real-time input data. In the future, intelligent forecasting using AI and big data technologies can be incorporated to accurately predict wind power generation and user demand, improving decision-making accuracy. Through the control functions of the energy management system (EMS), automatic mode switching and energy allocation can be completed without manual intervention.

The thermal energy storage technology proposed in this paper, combined with multi-scenario applications, can reduce the wind curtailment rate from 50% to 10%-15%, achieving the integrated utilization of wind power, thermal energy storage, and heating/cooling energy. This increases system flexibility. The use of this system can reduce standard coal consumption by approximately 500,000 tons per year and decrease carbon dioxide emissions by 1.5 million tons.

5. Conclusion

This paper begins by analyzing the characteristics of wind energy, solar energy, biomass energy, ocean energy, and geothermal energy resources, as well as regional electricity load characteristics across China. It emphasizes the importance of tailored power generation planning based on local resource characteristics and energy consumption features.

Building on this, the paper provides a detailed analysis of complementary strategies for various renewable energy sources in China. First, by combining actual data and regional characteristics, the paper systematically evaluates the advantages of wind-solar complementarity in stabilizing power generation fluctuations and identifies regions suitable for wind-solar hybrid power generation. Next, the paper explores the development and advantages of wind-solar complementary hydrogen production and energy storage technologies. Additionally, the paper explores the unique role of biomass energy in combined heat and power (CHP) systems in solving the stability issues of renewable energy utilization, providing feasible solutions for areas with limited wind and solar resources. Furthermore, this paper introduces the coupling power generation models of geothermal energy with solar and biomass energy, highlighting the utilization advantages of geothermal energy. By designing and optimizing locally adapted multi-energy complementary solutions, the on-site consumption of renewable energy can be greatly enhanced. Significant improvements in the efficiency, stability, and economics of renewable energy utilization can be achieved. In the future, further research and engineering applications of multi-energy complementary systems will play a key role in achieving the "dual carbon" goals and optimizing China's energy structure.

Finally, based on the wind resource characteristics and electricity load conditions in the Mengxi region of Inner Mongolia, this paper proposes a wind curtailment utilization system based on thermal energy storage technology. Its key features and advantages include multi-scenario collaborative applications, dynamic grid connection and off-grid mode switching, and intelligent scheduling optimization. Through targeted multi-energy complementary system design, the system can effectively promote the on-site consumption of wind energy in this region.

DOI: 10.54254/2755-2721/125/2025.21254

In the future, promoting the research and practice of multi-energy collaborative power generation will contribute to more efficient resource allocation and environmental protection, making a positive impact on China's sustainable development. Future research directions for multi-energy complementary systems can focus on the following areas: First, the development of multi-energy scheduling optimization algorithms based on artificial intelligence and big data technologies, to achieve dynamic collaboration and precise matching between different energy sources; Second, exploring the deep integration of efficient energy storage technologies with multi-energy complementary systems to enhance system flexibility and stability; Additionally, focusing on the construction and promotion of regional energy internet, through distributed energy networks to further enhance renewable energy consumption capacity; Finally, strengthening the application verification of multi-energy complementary technologies in practical engineering, exploring the synergy of policy support and market mechanisms to provide solid guarantees for achieving a higher share of renewable energy in power generation. These research directions will provide important support for China in achieving its "dual carbon" goals.

References

[1] *Wang G, Zhang Z, Lin J. Multi-energy complementary power systems based on solar energy: A review[J]. Renewable and Sustainable Energy Reviews, 2024, 199: 114464.*

[2] *Lv M, Gou K, Chen H, et al. Optimal Design of Wind-Solar complementary power generation systems considering the maximum capacity of renewable energy[J]. Energy, 2024, 312: 133650.*

[3] *Guo Z, Wang J, Dong F, et al. Multi-objective optimization of multi-energy complementary system based on cascade utilization of heat storage[J]. Energy Conversion and Management, 2024, 299: 117864.*

[4] *Tian C, Tan Q, Fang G, et al. Hydrogen production to combat power surpluses in hybrid hydro–wind–photovoltaic power systems[J]. Applied Energy, 2024, 371: 123627.*

[5] *Lin M, Shen J, Guo X, et al. Comparison of pumping station and electrochemical energy storage enhancement mode for hydro-wind-photovoltaic hybrid systems[J]. Energy, 2025: 134362.*

[6] *Lin J, Gu Y, Wang Z, et al. Operational characteristics of an integrated island energy system based on multi-energy complementarity[J]. Renewable Energy, 2024, 230: 120890.*

[7] *Li J, Ren Y, Ma X, et al. Comprehensive evaluation of the working mode of multi-energy complementary heating systems in rural areas based on the entropy-TOPSIS model[J]. Energy and Buildings, 2024, 310: 114077.*

[8] *Lu D, Liu Z, Bai Y, et al. Study on the multi-energy complementary absorption system applied for combined cooling and heating in cold winter and hot summer areas[J]. Applied Energy, 2022, 312: 118746.*

[9] *Yao Yubi, Zheng Shaozhong, Yang Yang, et al. Progress and outlook of solar energy resource assessment and utilization efficiency in China [J]. Solar Energy Journal, 2022, 43(10): 524-535.*

[10] *National Bureau of Statistics of the People's Republic of China. China Electric Power Statistical Yearbook [M]. Beijing: China Statistics Press, 2022.*

[11] *Kang Y, Yang Q, Bartocci P, et al. Bioenergy in China: Evaluation of domestic biomass resources and the associated greenhouse gas mitigation potentials[J]. Renewable and Sustainable Energy Reviews, 2020, 127: 109842.*

[12] *Zhang L X, Pang M Y, Han J, et al. Geothermal power in China: Development and performance evaluation[J]. Renewable and Sustainable Energy Reviews, 2019, 116: 109431.*

[13] *Qiao Yanhui, Han Shuang, Xu Yanping, et al. Wind-solar output complementarity analysis method based on weather pattern classification [J]. Automation of Electric Power Systems, 2021, 45(02): 82-88.*

[14] *Guo Y, Ming B, Huang Q, et al. Variation-based complementarity assessment between wind and solar resources in China[J]. Energy Conversion and Management, 2023, 278: 116726.*

[15] *Zheng Bo, Bai Zhang, Yuan Yu, et al. Wind-solar complementary hydrogen production system with multi-type electrolysis collaboration and capacity optimization [J]. Proceedings of the Chinese Society for Electrical Engineering, 2022, 42(23): 8486-8496.*

[16] *Perrone D, Castiglione T, Morrone P, et al. Numerical and experimental assessment of a micro-combined cooling, heating, and power (CCHP) system based on biomass gasification[J]. Applied Thermal Engineering, 2023, 219: 119600.*

[17] *Zhang Dong, Jiang Yuzhan, Li Haoran, et al. Research progress on biomass energy and combined heat and power (CHP) systems [J]. Transactions of the Chinese Society of Agricultural Engineering, 2024, 40(04): 14-28.*

DOI: 10.54254/2755-2721/125/2025.21254

[18] *Geng Zhi, Fu Yingjian, Yao Yao, et al. Characteristic analysis for complementary clean utilization system of solar and geothermal energy [J]. Thermal Power Generation, 2022, 51(6): 17-24.*
[19] *Lv X, Lv Y, Zhu Y. Multi-variable study and MOPSO-based multi-objective optimization of a novel cogeneration plant using biomass fuel and geothermal energy: a complementary hybrid design[J]. Energy, 2023, 270: 126921.*
[20] *Hai T, Ali M A, Alizadeh A, et al. Second law evaluation and environmental analysis of biomass-fired power plant hybridized with geothermal energy[J]. Sustainable Energy Technologies and Assessments, 2023, 56: 102988.*