Proceedings of the 5th International Conference on Materials Chemistry and Environmental Engineering
DOI: 10.54254/2755-2721/130/2025.20485

Stability Assessment and Reactive Power Compensation Strategies for Grid-Connected Wind Power Generations

Zisheng Dai[1,a,*]

[1]*School of Electric Power, Civil Engineering and Architecture, Shanxi University, Taiyuan, 030031, China*
a. 2202203711106@email.sxu.edu.cn
**corresponding author*

Abstract: With the acceleration of global economic integration and the rapid increase in population, the reserves of mineral resources on the earth are becoming increasingly scarce, and non-renewable resources are becoming increasingly scarce. Technological advances have significantly reduced the cost of photovoltaic and wind power, improved energy storage efficiency and smart grid technology, and solved the intermittent problem of new energy. How to boost the utilization rate of new energy and ensure its secure and reliable operation during grid connection is an important challenge that the current development of electric power technology must tackle. To serve as a guide for the creation of new wind power, this article analyses the two most widely used reactive power compensation devices, studies the method of restoring the stable state through reactive power compensation after the grid-connected wind power becomes unstable, and introduces several control methods for power compensation using reactive power compensation devices. The main objective of this article is to summarize the current mainstream stability assessment methods in the world and compare their benefits and drawbacks.

Keywords: Grid-connected wind power, stability, reactive power, development status.

1. Introduction

With the Paris Agreement and the carbon neutrality goal, governments around the world have promoted the development of the new energy industry through measures such as subsidies and tax incentives. In the market, electric vehicles and energy structure transformation have expanded the demand for new energy. Technological advances have significantly reduced the cost of photovoltaic and wind power, improved energy storage efficiency and smart grid technology, and solved the intermittent problem of new energy. The world is transforming towards a clean and low-carbon energy structure. The wind power industry is currently in a stage of rapid development, with global installed capacity continuing to grow and significant technological progress, especially in the fields of large-scale, intelligent, and offshore wind power. Figure 1 shows the cumulative installed capacity of wind power generation worldwide from 2013 to 2023.

© 2025 The Authors. This is an open access article distributed under the terms of the Creative Commons Attribution License 4.0 (https://creativecommons.org/licenses/by/4.0/).

DOI: 10.54254/2755-2721/130/2025.20485

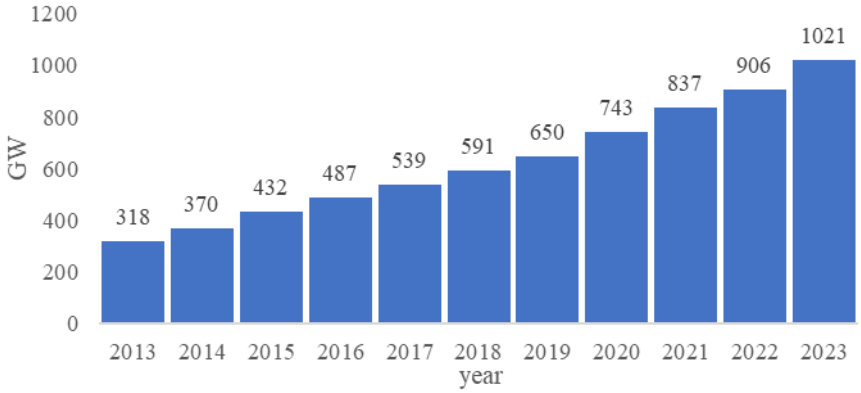

Figure 1: Global cumulative installed capacity of wind power from 2013 to 2023 (Data from: [1]).

Wind energy offers several advantages over other renewable energy sources, including low cost, quick construction, minimal environmental impact, high technological maturity, and a wide range of application scenarios. Because of this, wind energy is now very competitive in many areas, and it has a lot of potential for growth when coupled with the production of hydrogen. The two generator structures most commonly used in the field of wind energy generation at the moment are the direct drive permanent magnet synchronous generator (PMSG) and the doubly fed induction generator (DFIG) [2]. Figures 2 and 3 display the PMSG and DFIG schematic schematics, respectively.

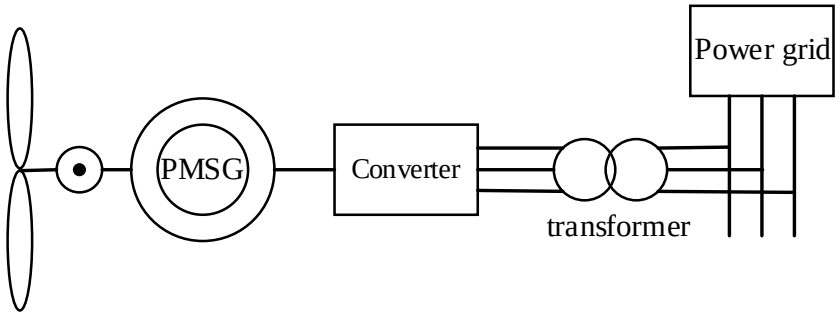

Figure 2: Schematic diagram of PMSG [2].

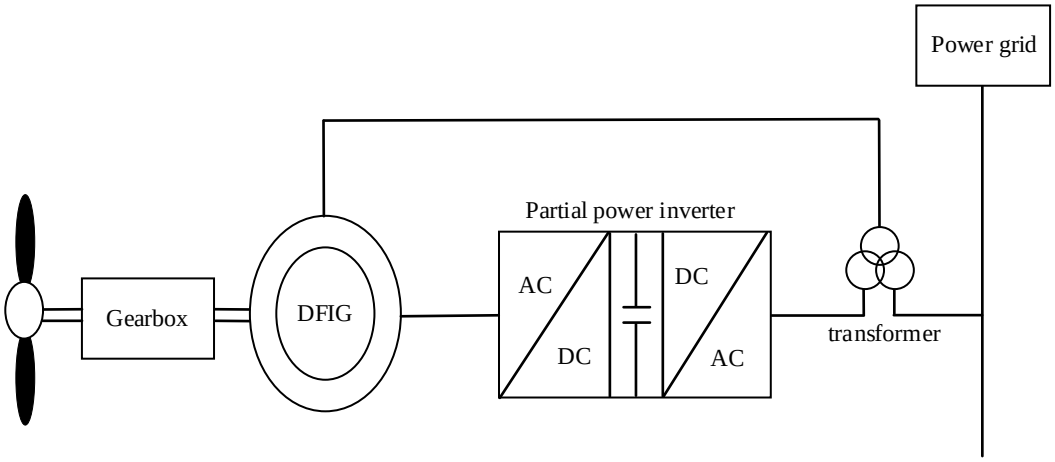

Figure 3: Schematic diagram of DFIG [2].

Numerous difficulties arise for the electricity grid system when large-scale wind power is connected. Due to the uncertainty of wind power output, traditional power sources (like thermal

DOI: 10.54254/2755-2721/130/2025.20485

power and hydropower) may need to start and stop frequently or adjust output or configure more spare capacity to cope with sudden decreases or increases in wind power output and maintain a balance between electricity supply and demand. In order to transform the wind's energy into energy for electricity and connect it to the grid, wind farms typically require power electronic equipment, such as converters. These devices will generate harmonics and impair the grid's power quality. The intermittency of wind power will cause frequent fluctuations in the power grid, affecting system reliability. The amount of electricity produced by wind power can vary significantly over short periods of time, causing frequency deviations and long-term power balance problems. When wind energy penetration is low, its impact on system operating costs is smaller. However, the system's power imbalance issue will become increasingly apparent as wind power's share of overall power generation rises [2]. The power system must set up more reserve capacity for regulation and backup power supply in the event that wind power is unstable in order to address these issues. Significant fluctuations in the wind power grid-connected frequency can lower the overall electrical grid's power quality, which can interfere with other generator sets' regular operation and even result in grid oscillations or shutdowns. The voltage may flicker and fluctuate a lot when wind power is linked to the grid, particularly in poor grid situations where the voltage might quickly surpass the permitted range [3]. This could cause the voltage deviation to increase. Users' electrical equipment, particularly those that are voltage-sensitive, will be impacted by frequent voltage fluctuations. industrial equipment, which may cause equipment damage or malfunction in severe cases. Huge variations on one side of a wind farm with a huge scale may reduce the stability of the electricity grid system and, in extreme circumstances, may result in the collapse of the grid. To avoid this situation, it is usually necessary to configure a backup power supply or energy storage system to cope with wind power fluctuations. Most wind turbines are induction generators and cannot provide reactive power support like synchronous generators [4]. Therefore, it is possible to consider using reactive power equipment to provide reactive power for wind power. In order to maintain the stability of grid-connected wind power, the challenges faced on the wind farm side mainly include reducing harmonic content, low voltage ride-through, high voltage ride-through, and protection and control strategies.

This article mainly lists several of the most commonly used stability assessment methods in the world. Their work processes are summarized, and then their advantages and disadvantages are compared. It also outlines two popular reactive power compensation devices and discusses how to restore a stable condition by supplying reactive power using such devices in the event that grid-connected wind power becomes unstable. Their respective benefits and drawbacks are contrasted, along with a summary of how their operating principles differ.

2. Stability Assessment Methods

The transient voltage stability assessment methods for wind power grid-connected systems are mainly divided into traditional time-dependent simulation methods, frequency-domain evaluation methods, and new data-driven and artificial intelligence methods. Every one of these approaches has pros and cons of its own and is applied in various contexts.

2.1. Time Domain Simulation

A dynamic model of the wind turbine and the power grid is first constructed using the time domain simulation (TDS) method. This model includes models for the wind turbine's speed, power output, generator, control system, etc. Then, the key parameters required for simulation are determined, such as wind speed, load change, control strategy and system impedance. Then, disturbances that may affect the stability of the system are defined, such as fault occurrence, sudden change in wind speed,

DOI: 10.54254/2755-2721/130/2025.20485

etc. Then, simulation is performed on the simulation software to determine the accuracy of the model and make optimization adjustments in a timely manner. After adjustment, it can be put into use.

Particularly as wind power penetration rises and the grid's integration of renewable energy gets more intricate, TDS has demonstrated great skills in evaluating the transient stability of wind farms. Research has demonstrated that TDS is capable of precisely simulating the dynamic behavior of wind power systems and identifying the system's dynamic response, including oscillation damping and frequency. This makes it possible to thoroughly examine elements that are essential to improving stability under various operating circumstances, such as grid strength, reactive power compensation, and generator speed regulation [5]. TDS's ability to incorporate nonlinear characteristics and control dynamics proves advantageous for capturing the fast, complex interactions during transient disturbances, as highlighted by La Scala's work, which shows how TDS allows for precise stability assessments and can leverage parallel computing to manage the computational load associated with large-scale systems [6]. Real-time applications of TDS have also been successfully implemented for transient instability detection, leveraging innovative indices based on potential energy boundary surfaces. These applications facilitate prompt response mechanisms crucial for maintaining stability as wind farm penetration increases [7]. Although the time-domain simulation method can simulate the dynamic response of the system more accurately, it also has obvious disadvantages. First, this method consumes a lot of time and computing resources when calculating complex large-scale wind farms, especially when nonlinear factors and random variables are involved, which poses a challenge to application scenarios with high real-time requirements [8]. Second, time-domain simulation often ignores the uncertainty of the power system, such as load fluctuations caused by wind speed changes, which may lead to insufficient accuracy of the evaluation results. In addition, for special wind farms such as floating wind turbines, the time-domain simulation method requires complex coupling analysis involving aeroelasticity and structural coupling, which further increases the complexity and time consumption of the calculation [9].

2.2. Frequency Domain Simulation

The frequency domain analysis technique first constructs a mathematical model of a wind turbine and its connected to the grid system, including electrical, mechanical and control systems; then converts the time domain indicate into the frequency domain indicate through the use of the Laplace or Fourier transform; inputs disturbance signals of different frequencies into the system to simulate various disruptions in actual operation; then calculates the frequency response of the system through frequency domain analysis, including gain and phase characteristics, evaluates the system's eigenvalues, determines small signal stability, and checks whether the system meets the stability standards. For a continuous-time signal $x(t)$, its Fourier transform $X(f)$ is defined as:

$$X(f) = \int_{-\infty}^{\infty} x(t) e^{-j2\pi ft} dt \tag{1}$$

Frequency domain simulation (FDS) has been widely used in wind farm stability assessment, mainly because it can efficiently handle the nonlinear complexity of the system and accurately model complex oscillation phenomena. The FDS method is particularly suitable for wind farm application scenarios and can help analyze synchronous and subsynchronous oscillations. For example, researchers proposed a method based on subsynchronous frequency domain modeling, which is suitable for accurate modeling of rotor resistance in wind farms, thereby solving the common dimensional complexity problem in wind farms, which makes it easier to evaluate system safety [10]. In addition, studies have shown that the modular modeling technology in the FDS method can provide reliable stability predictions while reducing model complexity, which is particularly important for large-scale DFIG models [11]. The shortcomings of frequency domain simulation method in wind farm stability assessment are mainly manifested in the inability to accurately simulate the nonlinear

DOI: 10.54254/2755-2721/130/2025.20485

and time-varying characteristics of wind farms. It is difficult to capture the transient process of the system. Randomness and uncertainty factors such as wind speed changes are ignored. The applicability to complex control strategies is limited, and the system needs to be simplified and assumed, which may reduce the accuracy of the assessment results. As a result, it might not accurately depict the wind farm's dynamic features and real functioning.

2.3. Data-driven and artificial intelligence approaches

The artificial intelligence method first builds a suitable artificial intelligence (AI) model (such as neural network, decision forest, etc.) according to the needs; uses the historical data of the wind farm (such as node voltage, wind speed, reactive power of power generation, and node voltage change rate) to train the model under manual monitoring, and then evaluates the training, optimizes parameters, and improves prediction accuracy; when the model is trained and applied in actual operation, first collect real-time data from the wind farm, and then use an AI algorithm to extract important features of the information and input the identified feature values into the previous model to draw conclusions.

Through methods like machine learning and deep learning, artificial intelligence (AI) can swiftly scan and analyze vast volumes of data from wind power systems, identifying and alerting users to any stability issues in real time [12]. Artificial intelligence can more precisely forecast fault patterns and fluctuations in wind power systems than conventional techniques, preserving the grid's efficiency and safety. Furthermore, AI technology can recognize intricate nonlinear patterns and take into account the combined effects of several variables on wind power systems' stability. This helps to optimize control strategies and lessen the influence of wind power grid connections on the power system. Its adaptive learning ability means that as the amount of data increases, the prediction accuracy and robustness of the AI model can also be gradually improved. Because of these qualities, AI is a vital tool for evaluating wind power stability, particularly in regions where wind power penetration is high. AI can assist in enhancing the power grid's dispatch flexibility and dependability through more precise stability evaluation. The shortcomings of AI are also obvious. First, AI models usually rely on a large amount of high-quality training data, but the data quality and availability of grid-connected wind farms are often unstable, especially in the case of complex changes in climate and power grid environment. In addition, AI models' reliance on data also makes them perform poorly when dealing with emergencies or extreme situations (such as rapid weather changes or power grid failures), because these situations may not be fully reflected in the training data. Secondly, although some advanced AI methods have high prediction accuracy, they are often regarded as "black box" models and lack interpretability, making it difficult for wind farm operators to understand and trust their evaluation results in actual applications. Finally, the operating conditions and characteristics of different wind farms vary greatly, and the generalization ability of AI models is poor, resulting in frequent adjustments when they are applied across wind farms, limiting the feasibility of their promotion and application. The applicable scenarios of different methods are summarized in Table 1.

Table 1: Applicable scenarios of different methods

Method	Scenario
Time Domain Simulation	· Large disturbance analysis · Complex control strategy evaluation · Dynamic process research
Frequency Domain Analysis	· Small perturbation analysis · Global stability assessment
AI	· Power prediction · Fault detection

DOI: 10.54254/2755-2721/130/2025.20485

3. Reactive power compensation

The main methods for maintaining the stability of grid-connected wind power on one side of the wind farm include artificial intelligence algorithm control, energy storage system support, wind turbine control strategy optimization, and reactive power compensation. This paper mainly discusses the method of reactive power compensation. One solution to maintain stability by reactive power compensation is to add additional hardware circuits, as shown in Figure 4, and another is to control it through a wind turbine control strategy. The main pieces of equipment used worldwide for reactive power adjustment at the moment are Static Var Compensator (SVC), Static Synchronous Compensator (STATCOM), Capacitor Banks, Automatic Power Factor Correction (APFC), and Static Var Generator (SVG). SVG and SVC are frequently used because of its great dynamic capabilities.

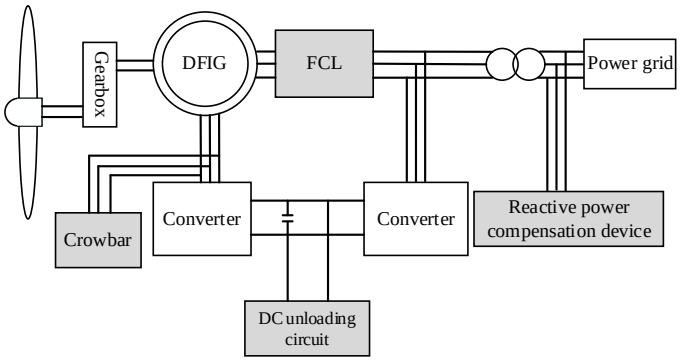

Figure 4: Wind turbines add additional hardware circuits [10].

3.1. SVG and SVC main structure and working principle

The control system, filter, and inverter make up the majority of SVG. In order to perform reactive power compensation, it regulates the amplitude and phase of AC current via power electronic devices. It features a quick response time and the ability to continually change the amount and direction of reactive power (either capacitive or inductive). When reactive power demand arises in the power grid, the control system recognizes the phase difference between voltage and current to make sure the SVG's reactive power production matches the demand. The control system makes the decision on whether inductive or capacitive reactive power is required based on this data. The inverter then adjusts the amplitude and phase of the output current in accordance with control system instructions. Finally, the filter removes high-frequency components from the output current to ensure the quality of the current supplied to the power grid. The SVG topology diagram is shown in Figure 5.

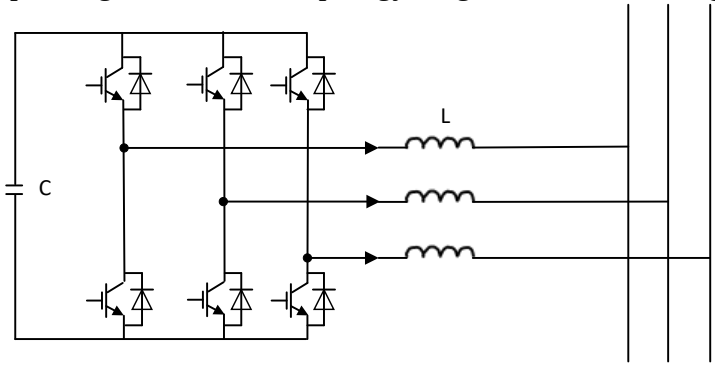

Figure 5: The topology diagram of SVG [11].

DOI: 10.54254/2755-2721/130/2025.20485

Thyristor Controlled Reactors (TCR), Thyristor Switched Capacitors (TSC), filters, and control systems make up the majority of SVC. Using TCR or TSC, it modifies the reactive power within the system. TSC regulates the switching of capacitors through thyristors, allowing the capacitors to generate reactive power, and its response speed is marginally slower than SVG. TCR controls the equivalent inductance of the reactor by altering the trigger angle of the thyristor, thereby adjusting the reactive power absorbed by the reactor. When the grid voltage is high, SVC must first connect to TCR in order to absorb inductive reactive power. Similarly, SVC needs to link to TSC to raise the voltage level in order to supply capacitive reactive power when the grid voltage is low. By altering the TCR and TSC's operating states, the control system maintains a steady voltage level while continuously monitoring the grid's condition and ensuring that the reactive power of the grid is balanced. Schematic diagrams of TCR type SVC and TSC type SVC are shown in Figure 6 and 7, respectively. The workflow of SVG and are shown in Figure 8 and 9, respectively.

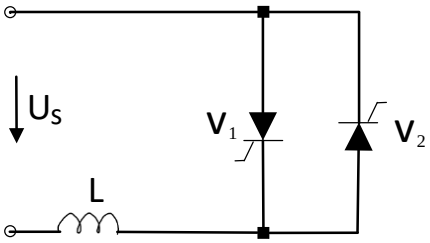

Figure 6: Diagram of TCR type SVC [13].

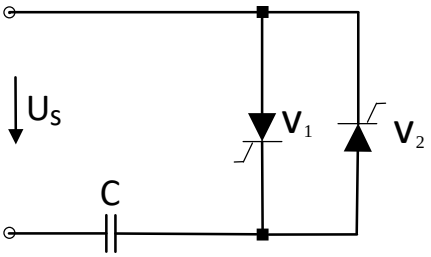

Figure 7: Diagram of TSC type SVC [13].

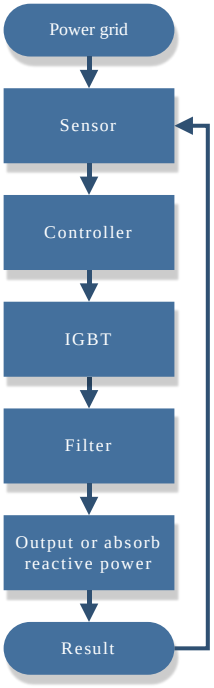

Figure 8: Workflow of SVG [13].

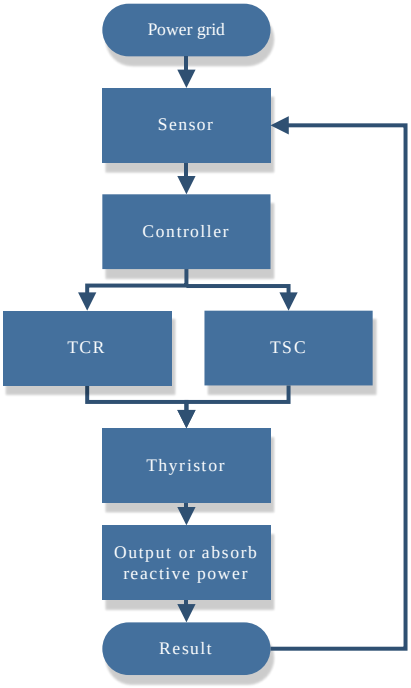

Figure 9: Workflow diagrams of SVC [13].

3.2. Performance comparison between SVG and SVC

Due to the use of fast power electronic switches, SVG has an extremely fast response speed, usually within a few milliseconds, and can adjust reactive power in real time and continuously to adapt to rapidly changing load conditions; the response speed of SVC is relatively slow, usually between tens

DOI: 10.54254/2755-2721/130/2025.20485

of milliseconds and hundreds of milliseconds, and it cannot perform real-time and continuous reactive power regulation like SVG. SVG can achieve continuous regulation of reactive power, from inductive to capacitive reactive power, with high regulation accuracy and stable performance, suitable for rapidly changing load requirements; while the regulation capability of SVC is discrete, and reactive power regulation is achieved through a combination of capacitors and reactors, so the regulation accuracy is low and it is not as flexible as SVG. SVG has a high switching frequency, which can filter out some harmonics and usually improve the power quality in the power grid, and has good effects on voltage fluctuations and harmonic suppression; SVC power regulation is achieved through semiconductor devices such as thyristors, which are prone to generate harmonics and require additional filtering devices to eliminate the impact of harmonics on the power grid [13]. Since SVG uses fully controlled power electronic devices, the complexity and manufacturing cost of the equipment are relatively high. SVC is relatively mature in technology, simple in structure, and low in cost. It has low dynamic requirements and can operate effectively at a low unit capacity cost in large-scale reactive power compensation scenarios [14]. In view of the above comparison, SVG is suitable for scenarios where reactive power demand in the power system changes rapidly and has high response time requirements, such as the need to maintain voltage stability in a high-frequency fluctuation environment [15]. SVC is suitable for scenarios where reactive power demand is relatively stable and changes slowly, and is usually used in traditional high-voltage transmission systems, power substations and other scenarios.

4. Prospectives

4.1. Hybrid assessment methods

For example, combining TDS with machine learning techniques can further enhance stability assessment under uncertain situations, especially in variable-speed wind farm applications [8]. It is also possible to consider training an AI model to identify the type of disturbance in advance and use appropriate assessment methods to accurately analyze the behavior of the system and improve efficiency.

4.2. Promote interdisciplinary cooperation.

The modeling of wind farms is not limited to wind power generation systems. For instance, it is possible to create a meteorological model of a wind farm and utilize artificial intelligence in conjunction with meteorological department prediction data to anticipate the stability of wind power output in the future. The reactive power reserve margin can then be sensibly modified to lower the wind farm's cost based on the projected results.

4.3. Hybrid reactive power compensation strategy

SVC provides basic reactive power support to ensure the basic stability of the system; while SVG provides rapid response when the load changes rapidly to meet real-time compensation requirements. In addition to lowering the system's reactive power loss, this integrated application can increase the power grid's stability and dependability. Additionally, it can greatly raise the grid's power factor. There is a significant decrease in the economic cost. The hybrid use of SVG and SVC will have more opportunities in smart grids and renewable energy access in the future as power electronics technology and control algorithms advance. The number of combinations and control strategies of the two will also be a question. Very good research direction.

DOI: 10.54254/2755-2721/130/2025.20485

5. Conclusion

The stability of grid-connected wind power has presented significant issues to the power grid system as the installed capacity of wind power generation continues to grow globally. This article initially presents a number of widely used techniques for evaluating stability, including artificial intelligence, frequency domain analysis, and time domain simulation. The time domain simulation approach has the advantage of correctly describing the dynamic behavior of the system while accounting for its nonlinearity. However, its shortcomings such as high computing requirements for large-scale systems, insufficient processing of uncertain factors, and computational complexity in specific structural analysis still need to be overcome by improving methods or combining other technologies. The frequency domain analysis method can provide reliable stability predictions while reducing the complexity of the model. However, it cannot simulate the nonlinearity of the system and cannot reflect the dynamic characteristics of the system. Artificial intelligence methods are widely used, respond quickly, can learn independently, and are easy to maintain, but the initial training is complex and requires high computing power for wind farms. Then, the reactive power compensation devices SVG and SVC are compared in terms of structure and working principle, and it is concluded that SVG is suitable for scenarios where the reactive power demand in the power system changes rapidly and has high requirements for response time, while SVC is suitable for scenarios where the reactive power demand is relatively stable and changes slowly.

References

[1] *Jung, C., Sander, L., & Schindler, D. (2024). Future global offshore wind energy under climate change and advanced wind turbine technology. Energy Conversion and Management, 321, 119075.*

[2] *Martinez, A., & Iglesias, G. (2024). Global wind energy resources decline under climate change. Energy, 288, 129765.*

[3] *Zhu, Y., Wen, H., Tafti, H. D., et al. (2024). Novel fast-speed partial-shading-tolerant flexible power point tracking for photovoltaic systems with explicit key points estimation. IEEE Transactions on Sustainable Energy, 15(1), 466 - 485.*

[4] *Li, Q., Zhang, Y., Ji, T., Lin, X., & Cai, Z. (2018). Volt/var control for power grids with connections of large-scale wind farms: A review. IEEE Access, 6, 26675-26692.*

[5] *Shabani, H. R., Hajizadeh, A., Kalantar, M., Lashgari, M., & Nozarian, M. (2023). Transient stability analysis of DFIG-based wind farm-integrated power system considering gearbox ratio and reactive power control. Electrical Engineering, 105(6), 3719-3735.*

[6] *Scala, M.. (2022). Time-domain simulation for transient stability analysis. In Advances in Power System Modelling, Control and Stability Analysis (Chapter 9). UK: The Institution of Engineering and Technology.*

[7] *Shabani, H. R., Kalantar, M., & Hajizadeh, A. (2021). Real-time transient instability detection in the power system with high DFIG-wind turbine penetration via transient energy. IEEE Systems Journal, 16(2), 3013-3024.*

[8] *Shahzad, U. (2023). A risk-based machine learning approach for probabilistic transient stability enhancement incorporating wind generation. Australian Journal of Electrical and Electronics Engineering, 20(2), 106-121.*

[9] *Lee, H., Kim, J., Kim, J., Shen, Z., Kyoung, J., Baquet, A., ... & Kim, J. W. (2023, June). An Efficient Time Domain Structural Assessment of a Floating Wind Turbine Structure. In International Conference on Offshore Mechanics and Arctic Engineering (Vol. 86830, p. V001T01A031). American Society of Mechanical Engineers.*

[10] *Xu, Y., & Gao, T. (2022). Sub-synchronous frequency domain-equivalent modeling for wind farms based on rotor equivalent resistance characteristics. Global Energy Interconnection, 5(3), 293-300.*

[11] *Zhang, C., Cai, X., Molinas, M., & Rygg, A. (2019). Frequency‐domain modelling and stability analysis of a DFIG‐based wind energy conversion system under non‐compensated AC grids: impedance modelling effects and consequences on stability. IET Power Electronics, 12(4), 907-914.*

[12] *Kumar, K., Prabhakar, P., Verma, A., Saroha, S., & Singh, K. (2024). Advancements in wind power forecasting: A comprehensive review of artificial intelligence-based approaches. Multimedia Tools and Applications, 1-30.*

[13] *Zhong, Z. (2009). The performance comparison of SVC and SVG based on simulink. Electric Switchgear, 12(1), 73-77.*

[14] *Sharieff, I., & Sodhi, R. (2018, December). A Simple Strategic SVCs Placement Scheme for Enhanced Voltage Stability Margin. In 2018 20th National Power Systems Conference (NPSC) (pp. 1-6). USA: IEEE.*

DOI: 10.54254/2755-2721/130/2025.20485

[15] Xu, H. (2012). Reactive Power Compensation in SVG Technology Research Present Situation and the Development. Advanced Materials Research, 19(s), 1022-6680.