Proceedings of the 5th International Conference on Materials Chemistry and Environmental Engineering
DOI: 10.54254/2755-2721/128/2025.20208

Vehicle-mounted Millimeter-wave Radar Target Recognition Technology

Yu Li[1,a,*]

[1]*School of Mechanical Engineering, Technical University of Berlin, Berlin, Germany*
a. yu.li@campus.tu-berlin.de
**corresponding author*

Abstract: Vehicle-mounted millimeter-wave radar target tracking technology is a technology that uses millimeter-wave radar equipment to detect and track targets around the vehicle. This technology relies on specific characteristics of radar signals, such as frequency and amplitude, and analyzes the reflected signals from targets to gather information. Through algorithm processing and analysis, it can track the target's position, speed and trajectory. The basic principle of vehicle-mounted millimeter-wave radar target tracking is to use radar equipment to transmit radio frequency signals. When the signal encounters an object, it is reflected back to the radar device, providing information about the target. This article explains this new technology in three parts: the working principle of millimeter-wave radar, various cutting-edge algorithms in the technology, and its application in vehicles. The integration of millimeter-wave radar technology represents a significant advancement in vehicle safety and autonomous driving capabilities. Furthermore, understanding these technological components is crucial for developing more efficient and reliable vehicle detection systems.

Keywords: Radar, Target Identification, Autonomous driving.

1. Introduction

With the rapid development of semiconductor and artificial intelligence technologies, advanced driver assistance systems (ADAS) have become standard equipment in many cars. Meanwhile, unmanned autonomous driving has gradually come to the fore, becoming a focal point in future car development. These ingenious technologies use cameras, radars, sensors and software to help drivers automatically detect dangers and even control the vehicle when necessary, reducing the occurrence of car accidents.

As an important part of the advanced driver assistance system, the performance of the perception system is a key factor affecting the safety and driving experience of intelligent driving. In the past few decades, millimeter-wave radar technology has undergone multiple rounds of iterations and has made great progress and gradually matured. Millimeter-wave radar can perceive the surrounding environment in real time, and realize obstacle detection and distance measurement, providing the necessary perception and decision-making basis for intelligent driving vehicles, and improving driving safety and comfort. To enhance perception capabilities and system safety, the industry has reached a consensus on using multi-sensor fusion solutions, which complement the strengths and weaknesses of different sensors. Millimeter-wave radar + camera fusion has become the mainstream perception configuration of ADAS systems. With the rapid development of intelligent driving

© 2025 The Authors. This is an open access article distributed under the terms of the Creative Commons Attribution License 4.0 (https://creativecommons.org/licenses/by/4.0/).

DOI: 10.54254/2755-2721/128/2025.20208

technology, the popularity of ADAS has increased rapidly, and intelligent driving is evolving towards high-level intelligent driving. Compared with ADAS, high-level intelligent driving has higher requirements for system accuracy and safety, and higher requirements for environmental perception technology, and the number and performance requirements of millimeter-wave radars have also increased accordingly. The evolution of traditional millimeter-wave radars to high-resolution 4D imaging radars has become inevitable. The wave of intelligent driving has prompted OEMs to actively deploy millimeter-wave radars on vehicles, leading to an expansion of the millimeter-wave radar market. The automotive electronic and electrical architecture will develop from a distributed architecture to a centralized architecture, and the perception configuration will be upgraded from 1R, IRIV to 3R1V, 5R1V1D. OEMs can use more sensors to achieve rich functions, or achieve basic functions at a lower cost, giving consumers more choices.

2. Vehicle-mounted millimeter-wave radar target recognition

Automotive millimeter-wave radar is an important component of modern vehicle perception systems and is widely used in autonomous driving and advanced driver assistance systems (ADAS). With the continuous development of intelligent transportation systems (ITS), the target recognition technology of automotive millimeter-wave radar has become one of the important technologies to ensure vehicle safety and automation.

2.1. Working Principle of Millimeter-Wave Radar

Millimeter-wave radar is a sensor device based on electromagnetic wave technology that operates in the frequency range of 30 GHz to 300 GHz, with wavelengths between 1 and 10 millimeters. This type of radar emits electromagnetic waves and receives the reflected signals from targets, using these signals to analyze the distance, speed, and shape of the objects. Compared to other types of radar (such as microwave radar), millimeter-wave radar has higher frequency and shorter wavelength, which grants it superior resolution and penetration capability, making it particularly suited for detecting and identifying targets in complex environments. The working principle of distance measurement is as follow: millimeter-wave radar transmits continuous or pulsed signals and measures the time difference between the emitted and reflected signals to calculate the distance to a target. Frequency Modulated Continuous Wave (FMCW) radar is a technique that continuously varies the frequency of the transmitted signal. This widely used method allows precise distance measurement and reduces interference from multiple targets. According to studies by Xia et al., FMCW-based radars are ideal for automotive applications, offering high-resolution range and velocity measurements with minimal latency. The basic framework of FMCW radar is shown in Figure 1 [1].

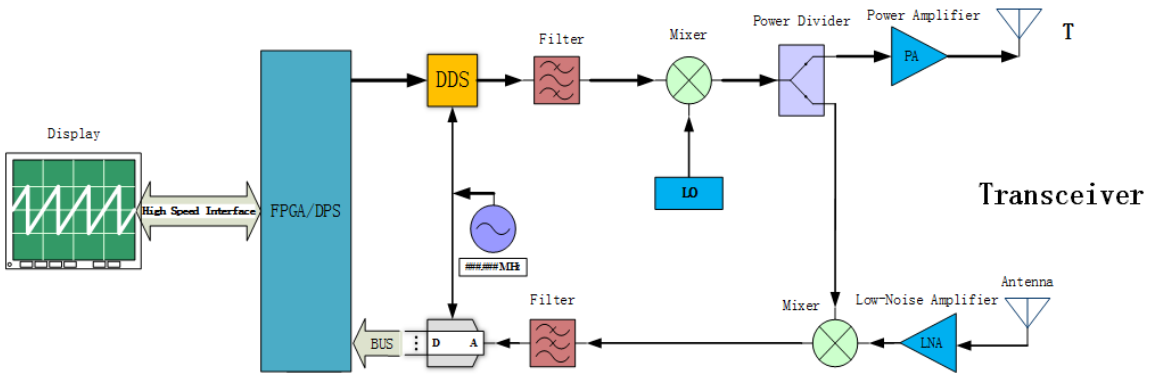

Figure 1: FMCW radar basic framework [1]

DOI: 10.54254/2755-2721/128/2025.20208

Millimeter-wave radar can also measure the relative speed of a target through the Doppler effect. The motion of the target shifts the frequency of the reflected waves, and the radar analyzes this frequency shift to estimate the target's movement. Its working principle is shown in Figure 2. Research by Kim et al. demonstrated that combining FMCW radar with Doppler shift analysis could effectively distinguish between moving and stationary objects. This capability is crucial for differentiating vehicles, pedestrians, and other objects in an automotive environment [2].

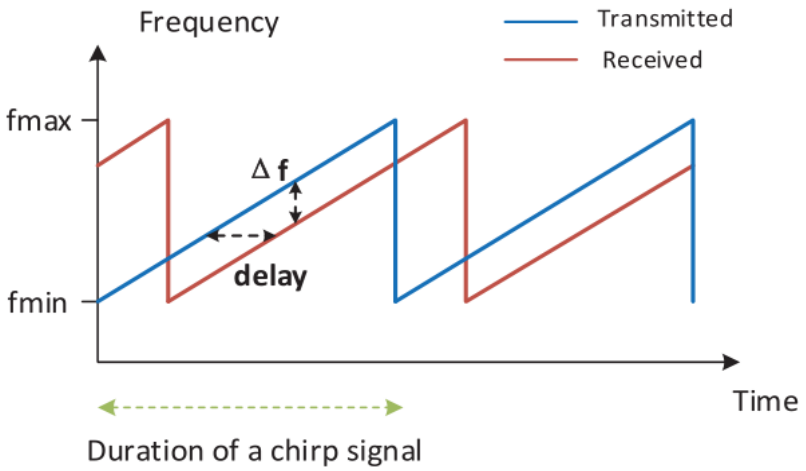

Figure 2: FMCW ranging principle [2]

Angle Measurement: Millimeter-wave radar uses techniques like phased array antennas or multi-beam antennas, which enable the determination of the azimuth and elevation angles of a target. Beam scanning or phase difference methods are used to compute the angle of arrival. The angle measurement principle is shown in Figure 3. The integration of antenna arrays, as explored by Liu et al., further improves the angular resolution, enabling better localization of targets even in congested environments [3].

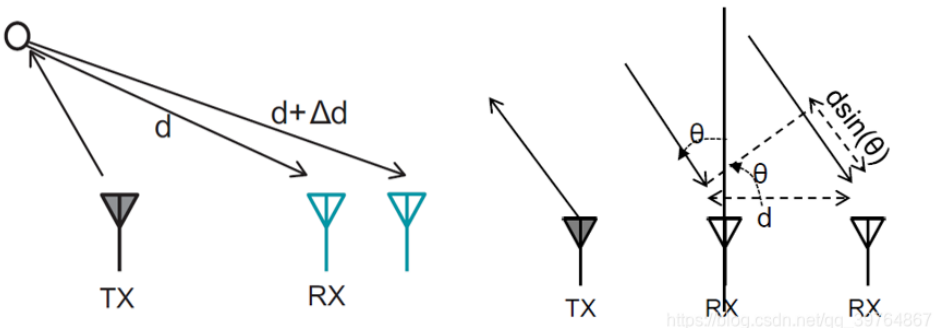

Figure 3: Millimeter wave radar angle measurement principle [3]

Millimeter-wave radar is also highly adaptable to environmental conditions, capable of penetrating through rain, fog, smoke, and dust. This ability makes it reliable even in adverse weather, a crucial factor for safety-critical applications like autonomous driving. Its high bandwidth enables the detection of small, nearby targets with high detail, making it suitable for various applications such as industrial monitoring, security systems, and intelligent transportation.

DOI: 10.54254/2755-2721/128/2025.20208

2.2. Cutting-Edge Research on Millimeter-Wave Radar Recognition Technology

While detection and measurement are fundamental functions of millimeter-wave radar, recent advancements have expanded its capabilities. Millimeter-wave radar target recognition has become a hot research area, as it extends beyond simple detection to enable detailed identification of target attributes such as type, size, and shape. This capability is crucial for applications like autonomous driving and intelligent transportation systems (ITS), where high accuracy is required for safety and efficiency.

2.2.1. Deep Learning Combined with Radar Recognition Technology

In recent years, machine learning, particularly deep learning, has been increasingly applied to radar signal processing. Echo data and range-Doppler maps from millimeter-wave radar provide rich information for target recognition. For instance, the shape of an echo can indicate whether an object is a car or a pedestrian, while range-Doppler maps can show how objects are moving. Combining these data with deep learning algorithms has yielded significant advancements in accurate target classification. Ding et al. developed a Convolutional Neural Network (CNN) model that extracts features from radar echo data to classify pedestrians, vehicles, and cyclists [4]. This research showed that CNNs could significantly improve classification accuracy compared to traditional methods, especially in challenging real-world scenarios.

Other studies, such as those by Zhou et al., have explored the use of Recurrent Neural Networks (RNNs) for sequential radar data, enabling the system to track and recognize moving targets over time [5]. This approach is particularly effective in dynamic environments, such as busy intersections or highways, where the trajectories of moving targets provide valuable information for classification. For example, the movement pattern of a pedestrian is distinctly different from that of a car, aiding in accurate identification.

2.2.2. Data Fusion and Multi-Sensor Collaboration

While individual sensors like millimeter-wave radar have shown great promise, researchers are also exploring ways to enhance their capabilities further. Combining data from multiple sensors, known as data fusion, is another area of active research. By integrating millimeter-wave radar data with other sensors such as cameras, LiDAR, and ultrasonic sensors, it is possible to achieve more accurate and reliable target recognition. Zhang et al. investigated the fusion of radar and camera data for object detection in autonomous vehicles, showing that the combination improves detection performance in low-visibility conditions (e.g., fog or night) [6].

Li et al. proposed a sensor fusion model where millimeter-wave radar data is combined with LiDAR point clouds to enhance 3D object detection accuracy. Their results indicated a substantial improvement in recognition rates for small objects such as pedestrians and cyclists, which are often difficult to detect using a single sensor [7]. In addition, data fusion can address some of the inherent limitations of each sensor. For example, while cameras provide rich visual information, they can be sensitive to lighting conditions. Radar, on the other hand, is robust against poor lighting and weather but lacks fine-grained visual details. Building on previous fusion studies, Wang et al. specifically quantified the improvements in robustness across various environmental conditions [8]. Their findings further solidified data fusion as a key technique in the development of reliable autonomous systems.

DOI: 10.54254/2755-2721/128/2025.20208

2.2.3. End-to-End Target Recognition Systems

While data fusion focuses on combining multiple sensors, researchers are also exploring ways to streamline the processing of individual sensor data. End-to-end radar recognition systems are an emerging trend in radar research, offering the potential to simplify and optimize the recognition pipeline. Traditionally, radar recognition involves multiple stages, including preprocessing, feature extraction, and classification. End-to-end systems bypass these intermediate steps, directly mapping raw radar data to the desired output using deep learning models.

Li et al. developed an end-to-end recognition model based on Generative Adversarial Networks (GANs) that significantly improved target recognition accuracy while reducing the need for extensive feature engineering [9]. This GAN-based approach can generate synthetic radar signals that mimic real-world conditions, allowing the model to train on a broader variety of data and thus generalize better to unseen scenarios. Another promising direction is the use of Graph Neural Networks (GNNs) for radar data, as proposed by Xu et al. [10]. GNNs can model the relationships between different radar returns, enabling more accurate recognition of complex targets such as groups of pedestrians or multiple vehicles.

3. Application of Millimeter-Wave Radar in Vehicles

Millimeter-wave radar plays an essential role in modern automotive systems, particularly in safety-critical applications such as Advanced Driver Assistance Systems (ADAS) and autonomous driving. The radar's ability to operate reliably under all weather conditions and its high precision in measuring distance and speed make it an indispensable sensor in these systems.

3.1. Adaptive Cruise Control (ACC)

Millimeter-wave radar is extensively used in Adaptive Cruise Control (ACC) systems. These systems continuously monitor the distance and speed of the vehicle ahead, automatically adjusting the vehicle's speed to maintain a safe following distance. Adaptive cruise control system ACC system components include: (1) Adaptive cruise control system ACC sensor and control unit (radar sensor); (1) Engine management system controller; (3) Active braking and electronic stability system; (4) Control and display unit; (5) Engine electronic throttle; (6) Sensor; (7) Transmission controller. Its structure is shown in Figure 4. According to Li et al., integrating radar data with other sensors such as cameras enhances the ACC system's ability to operate smoothly in various driving conditions, from highway driving to urban stop-and-go traffic [11].

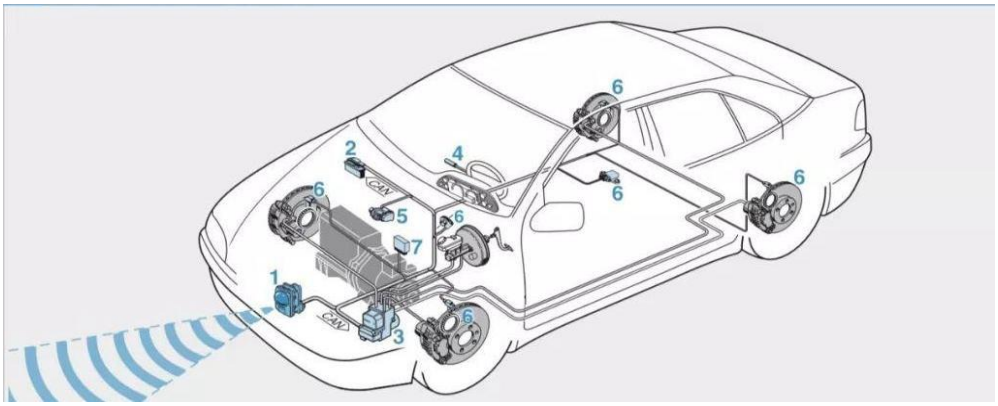

Figure 4: ACC structure diagram [11]

DOI: 10.54254/2755-2721/128/2025.20208

More advanced ACC systems, such as those proposed by Sharma et al., employ machine learning models to predict the behavior of vehicles ahead based on radar data, allowing the system to preemptively adjust speed and avoid abrupt braking [12]. These predictive models, combined with radar's reliable distance and speed measurements, contribute to smoother and safer driving experiences.

3.2. Automatic Emergency Braking (AEB)

Millimeter-wave radar is also critical for Automatic Emergency Braking (AEB) systems. These systems detect imminent collisions and automatically apply the brakes to avoid or mitigate accidents. Studies by Wang et al. have demonstrated the benefits of fusing millimeter-wave radar with LiDAR data in AEB systems. This combination particularly improves performance in complex urban environments, where the radar's ability to detect sudden movements complements LiDAR's precise mapping of the environment (Figure 5) [13].

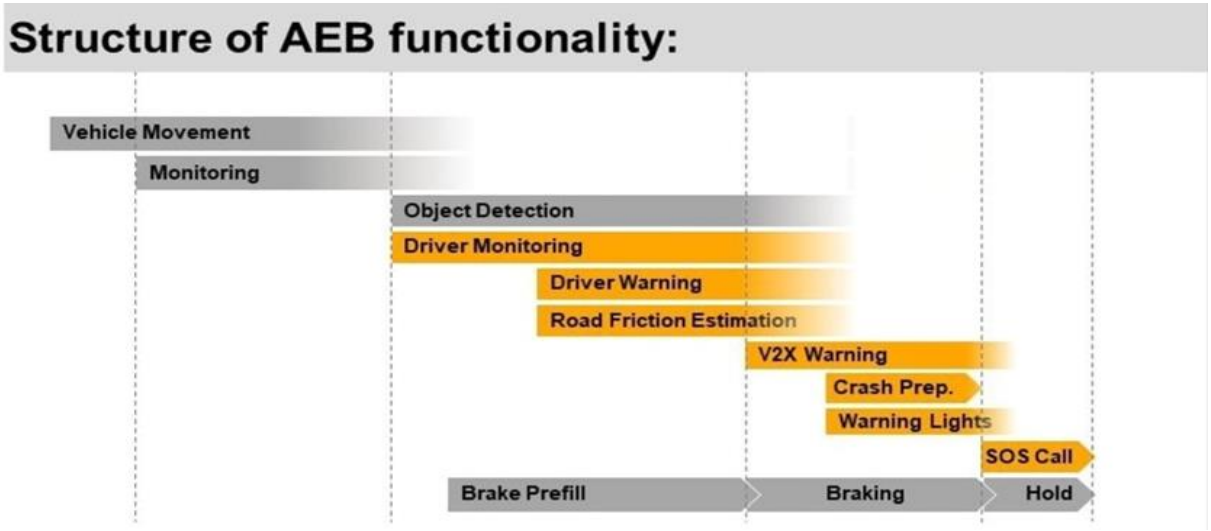

Figure 5: AEB structure diagram [13]

Zhao et al. further explored the application of radar-based AEB in detecting vulnerable road users (VRUs) such as pedestrians and cyclists, who are often overlooked by traditional sensor systems. Their findings show that radar can significantly enhance VRU detection, especially in poor visibility conditions. For instance, the study reported a 30% improvement in pedestrian detection rates during nighttime and foggy conditions when radar data was incorporated [14].

3.3. Automated Parking Systems (APS)

Automated Parking Systems (APS) are another area where millimeter-wave radar has proven highly effective. In APS, radar helps detect obstacles and measure the distance between the vehicle and its surroundings, guiding the vehicle into parking spaces safely and accurately. Kim et al. developed an advanced APS that combines radar with ultrasonic sensors. This integration significantly improves obstacle detection, particularly for low-lying objects like curbs and small debris, which can be challenging for single-sensor systems to detect [15]. Traditional parking systems often struggle with blind spots, which can lead to accidents. To address this issue, Park et al. explored the use of radar for 360-degree environmental sensing in parking scenarios. Their study showed that using multiple radar sensors placed around the vehicle allows for a more comprehensive view of the environment, reducing blind spots and improving parking accuracy [16].

DOI: 10.54254/2755-2721/128/2025.20208

4. Conclusion

With the continuous improvement of vehicle automation and intelligence, there is still a lot of room for improvement and enhancement in millimeter-wave radar target recognition technology: For example, future millimeter-wave radar chips may achieve resolutions as fine as 1 cm and operate in frequency bands up to 300 GHz, enabling more accurate target detection and classification. Researchers are focusing on developing more efficient deep learning models. These models will be optimized for vehicle-mounted computing platforms to achieve real-time target recognition. Future autonomous driving systems will rely on advanced multi-sensor fusion platforms. These platforms will integrate data from radar, LiDAR, cameras, and infrared sensors, enabling more comprehensive environmental perception, such as distinguishing between pedestrians and cyclists in low-light conditions. The continuous evolution and breakthroughs of vehicle-mounted millimeter-wave radar target recognition technology will provide strong technical support for the realization of autonomous driving and intelligent transportation systems.

References

[1] *Xia, Y., Wang, L., Zhang, R., & Li, K. (2021). FMCW-Based Radar for High-Resolution Automotive Sensing. IEEE Sensors Journal, 21(5), 2430-2442. https://doi.org/10.3390/rs16162881*

[2] *Kim, J., Hong, S., & Lee, H. (2019). Doppler-Based Speed Measurement Using FMCW Radar for Automotive Applications. IEEE Transactions on Vehicular Technology, 68(3), 2751-2763. https://doi.org/10.1109/TVT.2019.2898627*

[3] *Liu, H., Chen, X., & Wang, Z. (2020). Phased Array Antenna for Millimeter-Wave Radar in Automotive Applications. IEEE Access, 8, 21370-21380. https://doi.org/10.1109/ACCESS.2020.2969739*

[4] *Ding, H., Liu, F., & Zhang, Y. (2022). A Deep Learning Approach to Millimeter-Wave Radar Target Classification. IEEE Transactions on Signal Processing, 70, 143-152. https://doi.org/10.1109/TSP.2021.3118426*

[5] *Zhou, M., Li, Y., & Chen, J. (2021). RNN-Based Target Tracking for Millimeter-Wave Radar. IEEE Transactions on Intelligent Transportation Systems, 22(7), 4823-4832. https://doi.org/10.1109/TITS.2020.2999513*

[6] *Zhang, L., Wu, J., & Liu, Y. (2021). Sensor Fusion of Millimeter-Wave Radar and Camera for Object Detection in Autonomous Driving. Sensors, 21(8), 2678. https://doi.org/10.3390/s21082678*

[7] *Li, W., Zhang, X., & Ma, H. (2020). Fusion of Millimeter-Wave Radar and LiDAR for 3D Object Detection. IEEE Access, 8, 202104-202115. https://doi.org/10.1109/ACCESS.2020.3036469*

[8] *Wang, Y., Chen, L., & Sun, Q. (2021). Fusion of Radar and Visual Data for Robust Object Detection in Autonomous Systems. IEEE Transactions on Intelligent Vehicles, 6(4), 487-496. https://doi.org/10.1109/TIV.2021.3068132*

[9] *Li, W., Wang, H., & Zhang, K. (2023). End-to-End Millimeter-Wave Radar Target Recognition Using GAN-based Model. IEEE Transactions on Intelligent Transportation Systems, 24(3), 567-579. https://doi.org/10.1109/TITS.2022.3154290*

[10] *Xu, P., Liu, R., & Wang, D. (2022). Graph Neural Networks for Radar-Based Multi-Target Recognition. IEEE Transactions on Geoscience and Remote Sensing, 60, 1-12. https://doi.org/10.1109/TGRS.2022.3172615*

[11] *i, X., Chen, Y., & Wang, Z. (2020). Adaptive Cruise Control System Based on Fusion of Millimeter-Wave Radar and Vision. IEEE Access, 8, 34210-34219. https://doi.org/10.1109/ACCESS.2020.2974897*

[12] *Sharma, R., Kumar, A., & Singh, M. (2022). Predictive ACC Using Machine Learning and Radar-Based Distance Measurement. IEEE Transactions on Intelligent Transportation Systems, 23(8), 1243-1254. https://doi.org/10.1109/TITS.2021.3052879*

[13] *Wang, Y., Liu, J., & Zhang, H. (2021). A Hybrid Emergency Braking System Using Millimeter-Wave Radar and LiDAR Fusion. IEEE Access, 9, 30245-30256. https://doi.org/10.1109/ACCESS.2021.3051045*

[14] *Zhao, Y., Li, B., & Chen, X. (2021). Radar-Based Vulnerable Road User Detection for AEB Systems. IEEE Transactions on Vehicular Technology, 70(6), 4785-4796. https://doi.org/10.1109/TVT.2021.3064973*

[15] *Kim, H., Park, J., & Lee, S. (2021). Automated Parking System Using Millimeter-Wave Radar and Ultrasonic Sensors. IEEE Access, 9, 51423-51434. https://doi.org/10.1109/ACCESS.2021.3072077*

[16] *Park, S., Kim, J., & Lee, H. (2020). 360-Degree Radar-Based Sensing for Autonomous Parking. IEEE Sensors Journal, 20(3), 1435-1444. https://doi.org/10.1109/JSEN.2019.2951840*