Proceedings of the 5th International Conference on Materials Chemistry and Environmental Engineering
DOI: 10.54254/2755-2721/123/2025.19581

Comprehensive Analysis of Small Disturbance Stability for Grid-Connected Wind Power System

Xinyu Cui[1,a,*], Ziwen Li[2,b], Yiming Liu[3,c]

[1]*School of International Education, Guangdong University of Technology, Guangzhou, 511495, China*
[2]*College of Automation and Electronic Engineering, Qingdao University of Science and Technology, Qingdao, 266061, China*
[3]*School of Mechanical, Electrical and Information Engineering, Xiamen Institute of Technology, Xiamen, 361021, China*
a. 3122009818@mail2.gdut.edu.cn, b. 19506150618@163.com, c. liuyiming0531@icloud.com
**corresponding author*

Abstract: Under the impact of the fossil energy crisis and global warming, thermal power, which dominates the old energy structure, is being criticized, and the government's strategy of 'peak carbon and carbon neutrality' has made new energy sources, represented by wind and solar power, more and more optimal choices on the path of energy transformation. One more proven renewable energy source with potential for widespread use is wind power. In addition to new development opportunities and problems brought about by the energy transition aim, the grid-connected wind power collection system (GCWPCS) must also contend with small disturbance oscillation (SDO), which adversely affects the performance of the power system. This research examines the small disturbance stability (SDS) of GCWPCS. It investigates the SDS analysis method and mechanism from two viewpoints, summarizes the benefits and drawbacks of previous research findings, and projects where the field of SDS of GCWPCS will go in the future.

Keywords: Wind power generation, power grid, stability analysis, mechanism.

1. Introduction

Under the impact of the fossil energy crisis and global warming, thermal power, which dominates the old energy structure, is being criticized, and the government's strategy of 'peak carbon and carbon neutrality' has made new energy sources, represented by wind and solar power, more and more optimal choices on the path of energy transformation [1]. The new installations of different energy sources from 2019 to 2023 are shown in Figure 1. Figure 1 points out that during the five-year period from 2019 to 2023, there was no significant change in the new installed capacity of hydropower and nuclear power in the country, the newly added installed capacity each year shows a gradual increase in wind and solar energy [2]. Among them, although hydropower is technologically mature and can provide a stable power supply, it has a certain impact on our natural ecology; although nuclear power has a high long-term operational efficiency and a high resource utilization rate, the safety risk is too great; and although solar power is technologically mature and environmentally friendly, its power generation capacity is greatly affected by geography, weather, and the alternation of day and night;

© 2025 The Authors. This is an open access article distributed under the terms of the Creative Commons Attribution License 4.0 (https://creativecommons.org/licenses/by/4.0/).

DOI: 10.54254/2755-2721/123/2025.19581

wind power, on the other hand, although potentially harmful to birds, is increasingly favored by governments because of its land-use flexibility, its ability to be deployed quickly and put into operation sooner, its climate resilience, and its ability to be integrated into the development of local communities in the form of individual small wind turbines or large wind farms. Figure 2 summarizes wind power generation and growth rates from 2014 to 2023.

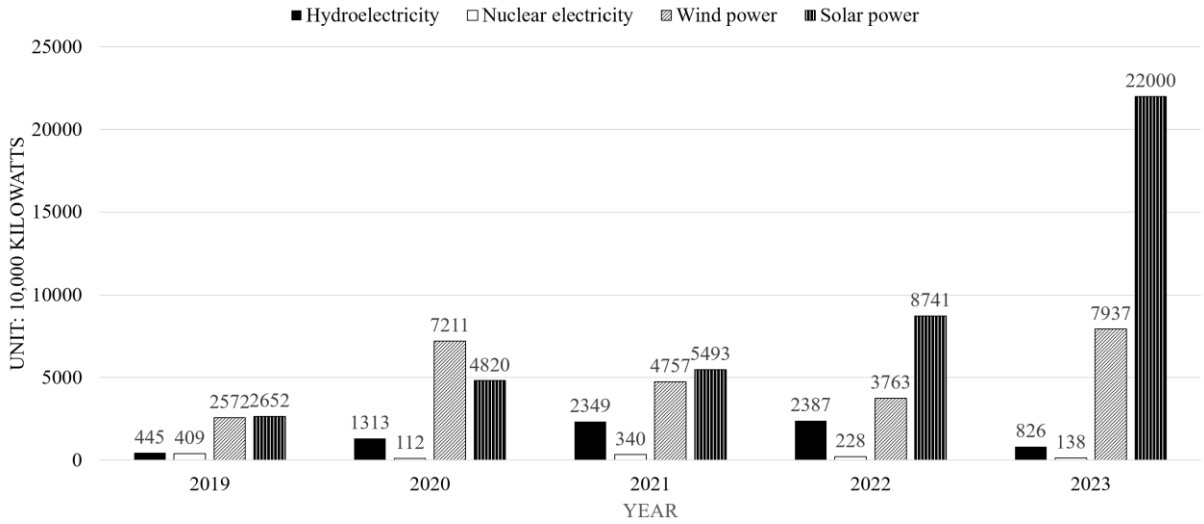

Figure 1: New installations of different energy sources from 2019 to 2023 (Data from: [2]).

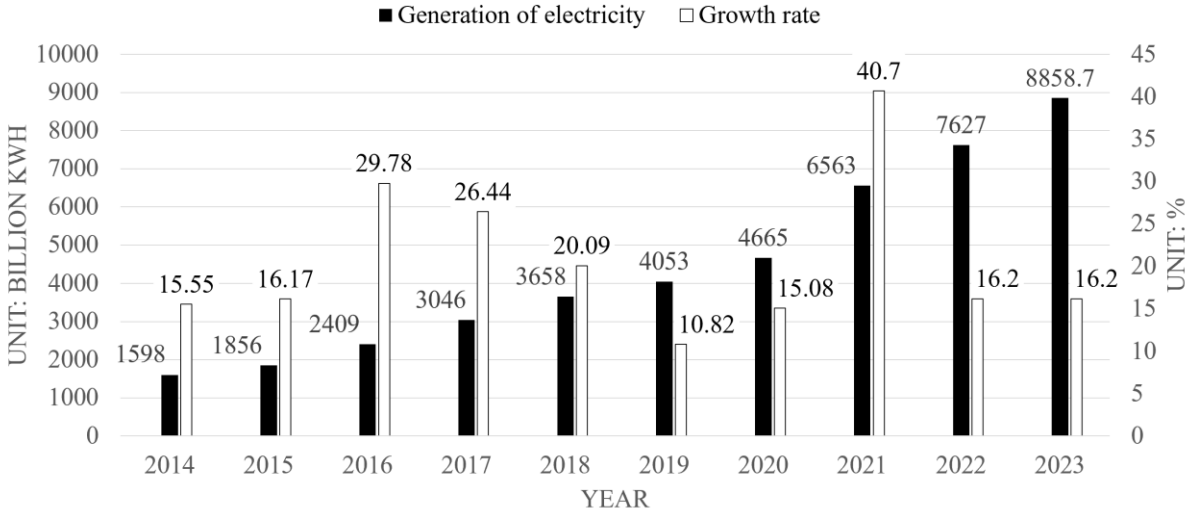

Figure 2: Wind Power Generation and Growth Rate, 2014~2023 (Data from: [2]).

Based on Figure 2, it can be observed that wind power generation has continued to rise from 2014 to 2023, with an annual growth rate exceeding 10%, indicating that large-scale wind power integration has gradually become a trend in industry development [2]. In this process, a three-phase induction motor with a constant frequency is connected to the stator winding the doubly fed induction generator (DFIG) equipped with a rotor side bidirectional voltage source converter (VSC), and the permanent magnet synchronous generator (PMSG) directly coupled with the rotor and wind turbine have become the most used wind power generation systems in the market. Based on the review of previous research results, this article will provide an overview of the structure, specific topology, and characteristics of these two types of generators [3].

DOI: 10.54254/2755-2721/123/2025.19581

Given the inherent volatility and long-distance transmission characteristics of wind power, as well as its extensive use of power electronics technologies such as inverters and phase-locked loops (PLL), the combined effect of these factors may lead to small interference oscillation when interacting with external power system (EPS) [3], the frequency of oscillation generally ranges from zero to several tens of hertz. This phenomenon poses a challenge to the protection mechanisms of traditional power systems and this will lead to adverse effects on the stability of the power system. Therefore, it is of urgent practical significance to conduct in-depth research on relevant analysis techniques and the mechanism of small interference oscillation.

In response to these issues, this article reviews previous research methods and discusses their advantages and disadvantages, mainly involving three aspects: first, the full order state space pattern analysis method (FOSSPAM) [4]. The following are the analysis methods related to the complex torque coefficient (CTCAM) [5]. Finally, the impedance analysis method (IAM) [4]. In addition, this article also analyzes the sub-synchronous stability mechanism when the grid-connected wind power collection system (GCWPCS) interacts with the EPS, and explores it from five aspects: firstly, the dynamic interaction (DI) between the wind power collection system and the series-compensated transmission system (SCTS), DI with weak AC system (WACS), DI with the direct current (DC) transmission system (DCTS), DI with synchronous generator (SG), and the DI with the dynamic reactive power compensation device (DRPCD) [6-8].

In summary, the GCWPCS is mainly divided into DFIG grid-connected system and PMSG grid-connected system. The main problems with GCWPCSs are the instability of wind power itself, weak connectivity caused by long-distance transmission, and small interference oscillations caused by high power electronics. The formation mechanism of this problem is complex and often involves numerous power electronic devices, making it difficult to solve using traditional modeling and calculations. Therefore, it is of great significance to conduct in-depth research on the analysis methods of small disturbance stability (SDS) and its interaction with different power systems to understand the mechanisms of SDS. Finally, this article looks forward to the future development direction of small signal stability research in GCWPCSs, hoping to provide reference for further research in the future.

2. Grid-connected wind power collection system

There are two primary categories of GCWPCSs: PMSG system and DFIG system. Because of their varied architectures, they both have distinct effects on the SDS in the power system [9-12].

Figure 3 shows the structure of DFIG. In conjunction with Figure 3, the internal components of the DFIG comprise a fan, rotor side converter (RSC), wire-wound induction generator, grid side converter (GSC), DC capacitor, filter reactance, and PLL. The converter uses a vector control method, whereby the grid voltage and generator voltage are compared by means of a PLL to ensure that the phase difference between them is constant, and this is used to establish the converter’s dq rotational coordinate system. Under this coordinate system, electromagnetic torque control and reactive power control are applied to the external loop control of the RSC, current control is used in the in-loop control of the RSC and GSC, independently, while DC voltage control is applicable for the ex-loop control of the GSC [13].

The DFIG system has the following advantages: firstly, it is capable of sustaining a consistent output frequency by modulating the generator's speed, thereby optimizing the utilization of wind energy; secondly, it possesses the ability to offer reactive power support to the grid, which contributes to grid stability; and thirdly, it is possible to suppress sub-synchronous oscillation (SSO) using RSC control; fourthly, phase-locking control technique based on second order generalized integrator (SOGI) can be used to derive the positive order component of the fundamental waveform and then phase-lock it, thus improving the accuracy of phase-locking to reduce the influence on the SDS.

DOI: 10.54254/2755-2721/123/2025.19581

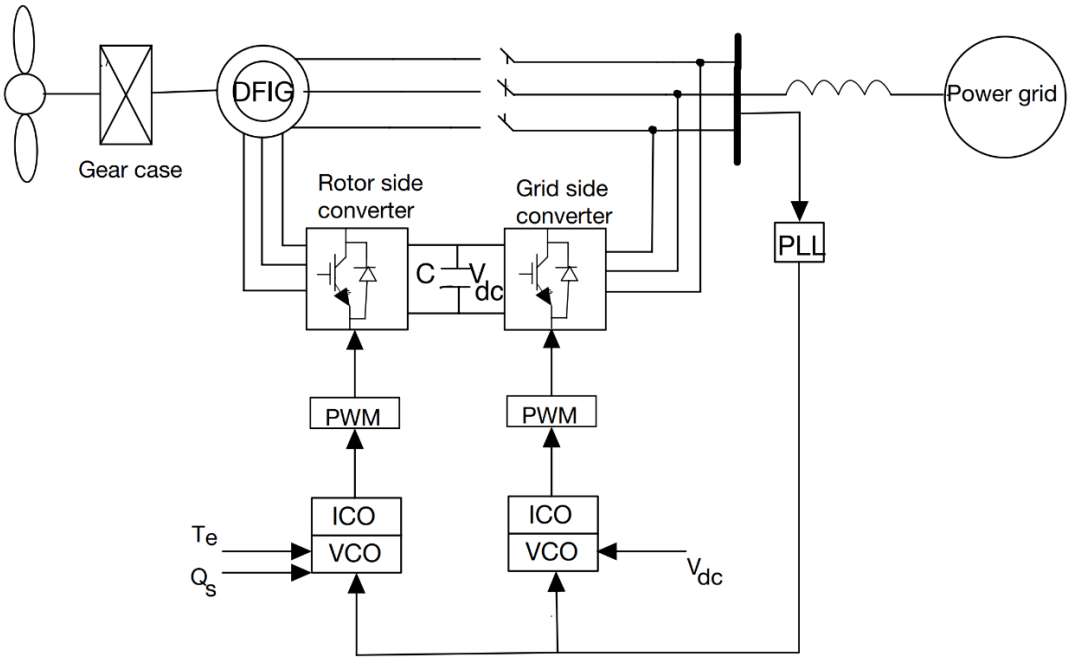

Figure 3: Configuration of a DFIG [3].

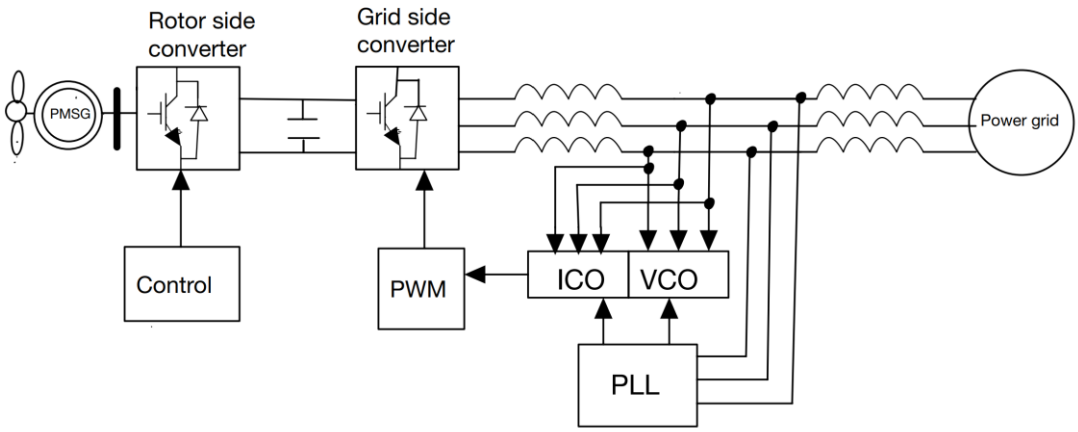

Figure 4: Configuration of a PMSG [3].

Figure 4 illustrates the internal components of the PMSG include a wind turbine, a direct-drive generator, an RSC, a GSC, a DC capacitor, a filter reactance and a PLL. The converter is controlled by vector control method, which establishes the dq rotation coordinate system of the converter by tracking the voltage by PLL. In this co-ordinate system, the DC voltage control is applied to the ex-loop control of the GSC [4]. The PMSG's wind turbine directly drives the generator's rotor, where permanent magnets interact with the stator windings to generate alternating current (AC). A power electronic converter facilitates the conversion of AC power into DC power. Subsequently, this DC power is converted back into AC power that is synchronized with the electrical grid before being supplied to the grid [14].

The PMSG system has the following advantages: firstly, the motor is directly powered by the wind turbine, which improves the energy conversion efficiency; secondly, small disturbance oscillation

DOI: 10.54254/2755-2721/123/2025.19581

(SDO) can be suppressed by optimizing the control strategy, e.g., by incorporating an extra damping control to increase the damping ratio of the system in the PMSG system [15].

In this section, the DFIG system and the PMSG system are introduced, and their structures, topology diagrams, and their respective characteristics are clarified, which are useful for understanding the SDS analysis method and the system mechanism of dynamically interacting SDS discussed in this paper.

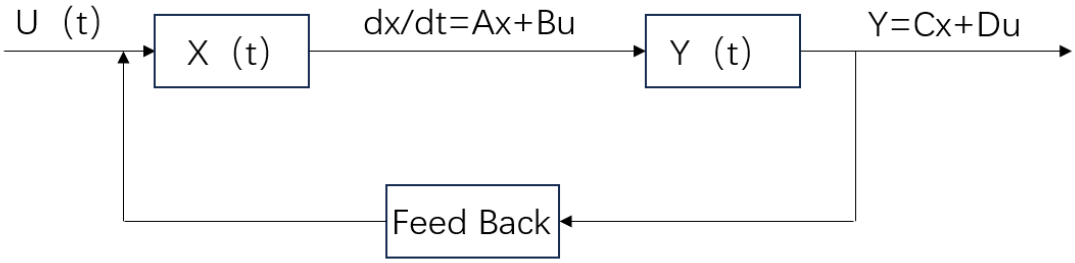

Figure 5: Diagram of FOSSPAM [4].

3. SDS Analysis Method for GCWPCS

3.1. Full Order State Space Pattern Analysis Method

The FOSSPAM, also known as eigenvalue analysis, is shown in Figure 5.

Since the dynamic characteristics of the dynamical model of the GCWPCS can be described by differential-algebraic equations, building a simulation model for the power system can be based on a linearized state space, and data such as eigenvalues, eigenvectors, and many reasons can be analyzed by combining the matrix simulation model of the state space with relevant data, from which the stability of the system can be obtained [16]. This method has a more rigorous theoretical model as the basis, so the judgement results are often more accurate, is widely used in large scale wind power system stability analysis of small disturbances. The specific method is as follows: the non-linear equations due to the presence of non-equilibrium, the system can be modeled here as follows [4].

$$\frac{d}{dt}\Delta x = A\Delta x + B\Delta u \tag{1}$$

$$\Delta y = C\Delta x \tag{2}$$

In the above equation, the vector group composed of Δx state variables, Δu is the input variable, Δy is the output variable, A is the state matrix, B is the input matrix, and C is the output matrix. Calculate the eigenvalues of matrix A to obtain the oscillation mode related data of the system, where the real and imaginary parts respectively reflect the damping and frequency of the system's oscillation.

And among them, the right and left eigenvectors of matrix A are $u=(u_1, u_i)$ and $v=(v_1^T, v_i^T)$, respectively. The feature sensitivity can be seen that the change of parameter α will have a certain impact on the eigenvalue λ_i The expression of feature sensitivity is as follows:

$$\frac{\partial \lambda_i}{\partial \alpha} = v_i \partial A(\alpha) u_i (v_i u_i \partial \alpha)^{-1} \tag{3}$$

It gives an indication of the extent to which, and the direction in which, the operating point and controller parameters affects the performance of the system [4].

The participation factor indicates the degree of participation of the state variable Δx_k in the oscillation mode λ_i as follows:

$$p_{ki} = \frac{v_{ki} u_{ki}}{v_i u_i} \tag{4}$$

DOI: 10.54254/2755-2721/123/2025.19581

If p_{ki} is the larger element of k=1, 2, 3, it can be concluded that the oscillation mode λ_i is dominated by the state variable Δx_k .If multiple dynamic element state variables jointly dominate an oscillation mode, it indicates that there are DIs among these dynamic elements, and both system damping and frequency are influenced by multiple dynamic components, and the presence of participation factors indicates that DIs can follow the pattern of parameter changes.

This transfer function can be obtained through equation 1:

$$\Delta y = C(sI - A)^{-1}B \cdot \Delta x \tag{5}$$

By calculating the poles of its function, the oscillation mode of the system can also be analyzed, which is mainly applicable to various SDO problems and DI oscillation problems.

3.2. Complex Torque Coefficient Analysis Method

The method involves dividing a closed-loop system into two smaller systems and processing them separately, which are the mechanical channel and the electrical channel, where the mechanical subsystem is mainly the motor shaft, and the electrical subsystem is mainly the engine windings, excitation windings, etc., and the transfer function is shown in Figure 6, the input value is torque, and the output value is speed [4].

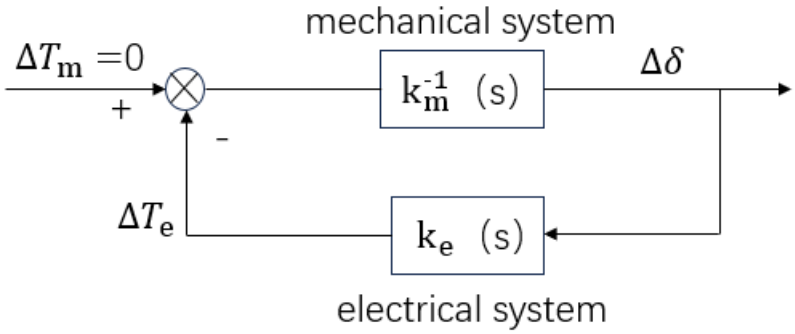

Figure 6: Diagram of compound torque model [5].

In the power system, two coefficients of complex torque can be used to represent the equivalent electromagnetic torque and mechanical torque under SDOs. The coefficient of complex torque includes real and imaginary parts, where the real part represents the equivalent elastic coefficient, and the imaginary part represents the equivalent damping coefficient. By analyzing the values of these coefficients, it can be determined whether there is small disturbance instability in the system at the torsional frequency. This method can also analyze the torsional vibration problem of the motor, so, it can play a significant role in the dynamic performance such as stability of GCWPCSs [5]. The CTCAM can be used to analyze damping characteristics and dynamic characteristics of systems under small disturbances, but this method also has certain limitations and can only be used for stability analysis of single input single output systems.

3.3. Impedance Analysis Method

The IAM is a method for studying and analyzing the stability of systems with dense electronic components. This method is an analytical approach that combines the closed-loop system model with the Nyquist stability criterion. Generally speaking, the power system should be divided into open-loop subsystems and other parts, by establishing frequency domain impedance models for two subsystems separately, after obtaining its impedance function, the stability of the system was analyzed using the Nyquist stability criterion. From this, system related parameters such as resonance

DOI: 10.54254/2755-2721/123/2025.19581

frequency and stability margin can also be calculated. There are two common impedance models, one is the dq domain impedance model, and the other is the sequence impedance model. They respectively establish impedance models in a rotating dq coordinate system and a stationary coordinate system. When studying small signal stability, impedance analysis can obtain the perspective of contributing negative resistance, thereby revealing the mechanism of system instability. Through the inference and analysis of the Nyquist stability criterion, it is concluded that the sufficient condition for system stability is positive system impedance, but it is not a necessary condition [4].

3.4. Summary

This section mainly discusses different analysis methods in the stability study of GCWPCSs in the face of small interference signals, as summarized in Table 1. The FOSSPAM has relatively high accuracy, but high complexity, can be used in various SDO problems and DI oscillation problems; the accuracy of CTCAM and IAM needs improvement and is too simplistic, and can only be used in single input single output scenarios.

Table 1: Comparison of methods for analyzing the SDS in GCWPCSs.

Analysis method	Key features	Advantage	Shortcoming	Applicable scenarios
Full order state space pattern analysis method	Full order state space model, eigenvalues, eigenvectors	Can be used for complex systems	Large computational workload and high computational requirements	Design and Analysis of Complex Control Systems
Complex torque coefficient analysis method	Stability of complex analysis system	Simplified stability analysis, easy to implement	Inaccurate for nonlinear systems	Stability analysis of linear or nonlinear systems
Impedance analysis method	System impedance characteristics, frequency response	Intuitive, easy to understand, widely applicable types	Unable to accurately reflect the full order dynamic characteristics of the system	Stability analysis and fault diagnosis of power systems and electronic circuits

DOI: 10.54254/2755-2721/123/2025.19581

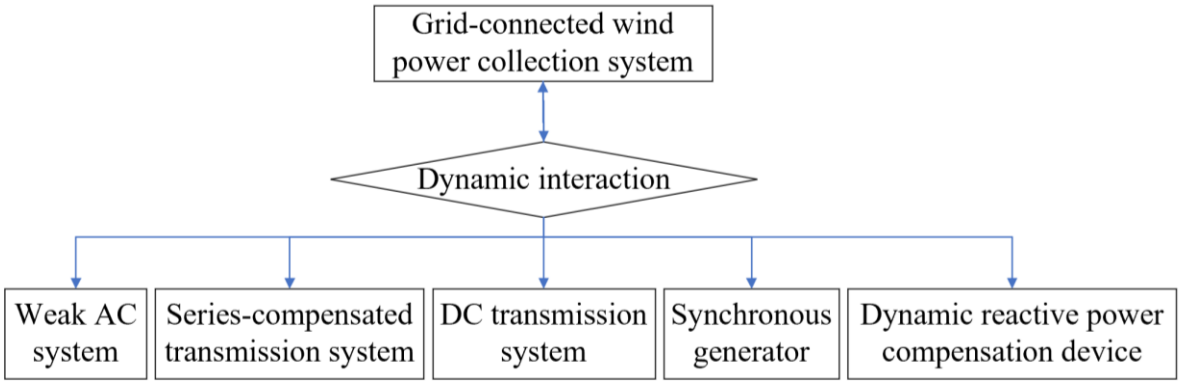

Figure 7: DI between the GCWPCS and electrical equipment [8].

4. Analysis of the Mechanism of SDS in the DI between GCWPCS and EPS

The integration of a wind farm into the power system can lead to DI between the GCWPCS and the EPS. This interaction has the potential to compromise the dynamic stability of the overall system, resulting in minor disturbances characterized by oscillatory instability. In order to address the above problems, this section summarizes the research results, which can be classified into five types of DIs between the GCWPCS and the five types of electrical equipment, namely, 1) SCTS, 2) WACS, 3) DCTS, 4) SG, and 5) DRPCD, for the purpose of the small disturbances stability analysis. Figure 7 illustrates the above interactions.

4.1. DI with SCTS

In 2009, a US DFIG turbine farm was directly integrated into the grid via a series-compensated transmission line (SCTL) with 75% series complement, which triggered SSOs around 20 Hz, resulting in off-grid wind turbines and damage to circuits [5]. Researchers have studied the related problems.

By calculating the eigenvalues and damping ratios of the state matrix of the DFIG-SCTS based on the pattern analysis method (PAM), it is known that the proportional integral (PI) parameter of the inverter has an influence on the frequency and damping of the sub-synchronous control interaction (SSCI), in which the GSC inner loop PI parameters play a dominant role in this effect [5]. Through studying the SSO mode, super-synchronous oscillation mode, electromechanical oscillation mode and axial torsion mode of the DFIG-SCTS, it can be concluded that the sub/super-synchronous oscillation mode frequency depends on the degree of the series complement, which is affected by the DFIG stator currents, the rotor currents, and the parameters related to the SCTL; the mode damping (MD) for SSOs increases with wind speed and decreases with string complement because of the inductive generator effect (IGE), and the converter control has a detrimental effect on it, which makes it a vital element affecting the stable performance of the GCWPCS. From the same study, it was further pointed out that the shaft system torsional modes are too low in frequency (<10 Hz) for torsional interactions to be triggered even at very high levels of crosstalk complementarity, while the wind speed has very little influence over the MD of the shaft system torsional modes. The study in the meantime pointed out that the MD of the electromechanical oscillation mode increases with the rotor resistance and its MD is strongly influenced by the wind speed [6].

In a SCTS where both DFIG and PMSG are involved, the DI of DFIG-SCTS is the main cause of sub-synchronous resonance (SSR), whereas the PMSG is passively involved in SSR events. Meanwhile, the GSC of the PMSG still has the potential to dynamically interact with the SCTS and trigger SSO under active power control or under AC voltage control [7]. Based on impedance analysis, this study uses the power dissipation characteristics to identify the major control variables and operating criteria affecting the behavior of wind turbines in the sub-synchronous frequency range,

DOI: 10.54254/2755-2721/123/2025.19581

while the system is also assessed for SDS using the generalized Nyquist stability criterion, showing that the bandwidth for current inner-loop control and the DC voltage control have very little effect on the power dissipation characteristics, the bandwidth for reactive power control and the PLL control have a significant effect on the power dissipation characteristics. It was also found that both the enlarging of the PMSG active power output and the increase of the crosstalk complementary degree have an unfavorable effect on the power dissipation characteristic [8].

The above papers have analyzed the stability characteristics of SDOs induced by the DI between the GCWPCS and the SCTS from different perspectives.

4.2. DI with WACS

In 2014, a wind farm consisting of PMSG in China was remotely connected to the grid, and SSO of about 20 Hz occurred under a WACS, which led to the disconnection of the units from the grid in the thermal power plant [4]. Studies on the basis of IAM and mode analysis method explained this problem.

Studies based on impedance analysis have shown this, when multiple PMSG are connected to a WACS, they will form a resonant loop with the inductive enough of the WACS, and their interaction will lead to negative impedance effects in the SSO mode, which will cause unstable oscillations. A complementary sub-synchronous damping control loop can reshape the impedance and thus stabilize the SSOs [9]. This work describes the introduction of the concept of sensitivity on the basic of IAM, and combines the modelling results to obtain the impedance sensitivity of the system impact on the controller variables, and further analyses the effects of the current in-loop ratio gain, the DC voltage ex-loop ratio gain, and the PLL bandwidth on the system's sub-synchronous oscillatory characteristics [10].

A dynamic wind turbine model including a PLL module is developed on the basis of PAM to investigate the effects of active and reactive power of the RSC, the dynamic properties of the PLL, and the grid strength on the SSO stability of two parallel DFIG connected to a WACS. It is known that the system is easily destabilized due to PLL oscillations and the low short circuit ratio (SCR), high gain in the control loop and the drop in the grid strength decreases the MD of an Oscillation mode of the PLL. This study also proposed a damping controller to enhance the system's sustainability [3].

The above papers have analyzed the stability characteristics of SDOs induced by the DI between the GCWPCS and the WACS from different perspectives.

4.3. DI with the DCTS

The power grid is usually connected to wind farms through the DCTS, and in the course of the power system running there are also many SDO instability phenomena, which have been researched by both domestic and international academics.

To analyze the effects of five parameters on the damping characteristics and frequency characteristics of the SSO by setting up a PMSG-VSC based high voltage direct current (VSC-HVDC) system model, including the DC-side capacitance of the PMSG power generation system, VSC-HVDC AC side phase reactor, VSC-HVDC DC side capacitance and reactance, wind farm grid-connected impedance magnitude, number of equivalent turbines. The characteristics of VSC-HVDC control, along with the attributes of the AC side network, are examined and derived in relation to the system's SSO characteristics through the application of the eigenvalue method. Studies have also shown that the MD of the system decreases as the grid connection distance of the turbine farm increases [11].The study adopts a small interference modelling method to establish a matrix that takes into account the internal dynamic process of modular multilevel converter (MMC) and the PLL

DOI: 10.54254/2755-2721/123/2025.19581

dynamic process, and analyses all the effects of active power, controller variables, and equivalent resistor on the system stability, and points out that the characteristic root of the SSOs is mainly associated with the q-axis parameter of the MMC and the wind farm, and that an appropriate increase in the line resistor can make the system stability better [12].

Studies based on impedance analysis show that the DFIG exhibits negative resistance properties in the sub-synchronous operation state, while the wind farm side converter of the flexible DCTS exhibits positive resistance properties in this state, and the two are coupled through the electromagnetic torque, constituting an equivalent negative-resistance resonance loop, which then triggers the SSO. The research findings suggest that an increase in the number of units integrated into the grid correlates with a decrease in wind speed, enhanced local access to capacitive loads, and an elevated current loop control ratio coefficient on the rotor component of the wind turbine. These factors collectively contribute to an increased risk of instability in the system's SSO [13].

The above papers have analyzed the stability characteristics of SDOs induced by the DI between the GCWPCS and the DCTS from different perspectives.

4.4. DI with SG

In 2014, a wind farm failure in China resulted in induced shaft system sub-synchronous torsion of multiple thermal power units connected to the grid at a distant location [4].

By studying the variation of SG shaft torsional vibration before and after grid connection of DFIG wind farms, focusing on the effect of RSC control parameters of DFIG on SG shaft torsional vibration, it is shown that the wind farms lead to a reduction of the system's damping associated with SSO. Meanwhile, both active and reactive power of the DFIG wind farm exert a considerable influence on the system SSO damping [14]. In the sub-synchronous operation state, the PLL introduces negative damping, which significantly exacerbates the negative resistive effect of the VSC, leading to system destabilization by SDOs [15].

By the research on the effect of PLL control on the electromechanical oscillation modes of thermal power units in power systems with the presence of PMSG, the study reveals that when the PLL open-loop oscillation modes and the SG electromechanical open-loop oscillation modes are in the complex plane close to each other, the DI between the PMSG and the thermal units become very powerful due to the improper parameter tuning, and this results in the degradation of the system's stability against small disturbances. It is also pointed out that the access of the PMSG will make the sub-synchronous damping of the thermal generator unit reduce, which will in turn exacerbate the SSO of the system [16].

The above literature analyses the stability characteristics of SDOs induced by the DI between the GCWPCS and the SG from different perspectives.

4.5. DI with DRPCD

In most wind farms, DRPCDs such as static var compensator (SVC) and static var generator (SVG) are installed to improve voltage stability. However, there are few studies on the effect of these devices on the SDS in GCWPCS.

Studies using PAM show that there is an obvious sub-synchronous coupling between PMSG and SVG, when SVG is set with unreasonable control parameters, the grid-connected system will generate SSOs in the presence of external disturbances. When the in-loop proportionality coefficient of the SVG current decreases or the inner loop proportioning factor of the PMSG grid-side decreases, the oscillation frequency of the system exhibits a decline, concurrently accompanied by an increase in the extent to which the SVG and the PMSG contribute to the oscillatory behavior. The study also

DOI: 10.54254/2755-2721/123/2025.19581

points out that the oscillation frequency of the system increases with increasing operating wind speed [4].

This study mathematically analyses the dynamic response process of DFIG and SVG under system disturbances, gives the stability criterion based on the interaction, and points out that too large a current inner-loop control gain of the RSC of the DFIG with too small an integration time constant, or too large a control gain of the SVG with too small an integral time constant, both make the DI between the DFIG and the SVG enhanced, making the system more prone to small disturbance instability [4].

Table 2: Stability analysis for small disturbances in DI between wind power and electrical equipment.

Electric Equipment	Mechanism	Methods of Analysis
Series-compensated transmission system	· Decreased MD due to interaction of wind power with series-compensated transmission system · Negative resistance effect in grid-connected wind power systems	PAM; IAM
Weak AC system	· Negative resistance/negative damping effects in grid-connected wind power systems · Wind power interacts with weak AC system resulting in decreased MD	PAM; IAM
DC transmission system	· Decrease in MD due to interaction of wind power with flexible DC transmission system · Negative resistance effect in grid-connected wind power systems	PAM; IAM
Synchronous generator	· Wind power interacting with synchronous generator causes MD to fall off · Negative SG damping effect	PAM; IAM
Dynamic reactive power compensation device	· Interaction of wind power with dynamic reactive power compensation device leads to a decrease in MD · Negative resistance effect in grid-connected wind power systems	PAM; IAM

4.6. Summary and Comparison

A summary and comparison of the analytical methods and generation mechanisms for the analysis of SDS in the DI between the GCWPCS and five types of electrical equipment is shown in Table 2. The above five cases have similarities in both the analysis method and the generation mechanism. The mode analysis method can be used to analyze the stability of wind farms and SCTSs, WACSs, flexible DCTSs, SGs, and DRPCDs for DI of small disturbances, and their generating mechanisms are all MD decline. Impedance analysis can also be used in the above five cases, but their generation mechanisms are slightly different, except for the SG is due to the wind power to the SG injected into the negative damping caused by the instability, the other is the wind power itself is unstable.

In conjunction with the current research, researchers lack studies on the negative resistance/negative damping features of wind turbines placed under the influence of multiple control links; and the current analyses based on models and examples still lack studies on the general laws of oscillatory instability; finally, the majority of contemporary research on GCWPCSs primarily

DOI: 10.54254/2755-2721/123/2025.19581

emphasizes the stability analysis of its DI with the EPS with small disturbances, while there is a lack of research on the DI between wind generators within large-scale wind farms.

5. Foresight

Summarizing the whole paper, it is discovered that some advances have been accomplished in the study of the SDS in GCWPCSs, especially in the research methodology and the analytic aspects of the SDS mechanism for the DI with the EPS. However, it is obvious that there are still many problems to be solved in the related fields.

- Improvement and enrichment of the analysis methods are still needed. Currently, the methods used for SDS analysis of GCWPCS include FOSSPAM, complex torque coefficient method, and impedance analysis, among which the FOSSPAM has higher accuracy but high complexity, and has a wider scope of application; the CTCAM and the IAM have low accuracy but moderate complexity, and can only be used for single-input and single-output scenarios. It is worth investigating whether the advantages of the three can be combined and used to propose new analysis methods in the future.
- Mechanistic analyses under different scenarios still need to be further investigated. At present, the mechanism analysis of SDS between wind farms and external systems based on PAM and IAM has been widely studied in contrast to the limited studies on the negative resistance and negative damping properties of wind turbines influenced by different control factors, the analysis of the general law of oscillatory instability based on the model and the examples, and the analysis of the DIs between wind turbines within large-scale wind farms. The model analysis method can be used for the analysis of the DI between wind turbines within a large-scale wind farm. Meanwhile, the mode analysis method can explain the MD drop and the specific interactions between the dynamically interacting components through modelling, however, analyzing the mechanism is challenging. Impedance analysis can clarify the mechanism by examining it through the lens of negative resistance or negative damping effects, but it is difficult to analyze the interactions between dynamically interacting components. It is necessary to further deepen the research in the future to ensure the security and reliability of the operation of wind turbines connected to the power grid.

6. Conclusion

As the global energy crisis and environmental issues become more pressing, nations worldwide are placing greater emphasis on wind energy as a clean and renewable power source. With the continuous progress of technology and policy support, GCWPCS will be given an increasingly significant part in the future energy grid. However, in practical applications, GCWPCS small disturbances caused by instability of the security incidents in the power system have a detrimental effect on both social and economic stability. Therefore, it is necessary for researchers to further in-depth study of the relevant analytical methods as well as mechanisms in the future. This paper summarizes and analyses the pros and cons, key features and application situations of different SDS analysis methods, and conducts a comparative analysis of the SDS mechanism of the GCWPCS interacting with the dynamics of five different types of electrical equipment. The following conclusions are drawn:

- Methods used to analyze the SDS include FOSSPAM, CTCAM and IAM, which have their own merits and demerits and need to be selected according to the applicable situation;
- The electrical equipment that dynamically interacts with the GCWPCS mainly includes SCTSs, WACSs, DCTSs, SGs and DRPCDs. Existing studies, generally by means of PAM or IAM, have concluded that the system oscillations and instabilities are mainly due to the MD drop or negative

DOI: 10.54254/2755-2721/123/2025.19581

resistance/negative damping effect caused by the DI between wind power and different electrical equipment.

Authors Contribution

All the authors contributed equally and their names were listed in alphabetical order.

References

[1] *Y. Zhu et al., "Novel Fast-Speed Partial-Shading-Tolerant Flexible Power Point Tracking for Photovoltaic Systems With Explicit Key Points Estimation," in IEEE Transactions on Sustainable Energy, vol. 15, no. 1, pp. 466-485, 2024.*

[2] *China Energy Media Group Co., Ltd. China Energy Big Data Report. Available: https://yb.1qh.cn/reports/2024-06-27/837a32825a 42ba07eda081d285d6bef4f038eef2.pdf (2024-06-27).*

[3] *J. Liu et al., "Impact of Power Grid Strength and PLL Parameters on Stability of Grid-Connected DFIG Wind Farm," IEEE Transactions on Sustainable Energy, vol. 11, no. 1, pp. 545-557, 2020.*

[4] *W. Du and H. Wang. "Small-Signal Stability of a Single Grid-Connected DFIG System." Analysis of Power System Sub/Super-Synchronous Oscillations Caused by Grid-Connected Wind Power Generation. Cham: Springer International Publishing, pp. 113-183, 2023.*

[5] *L. Kong, Y. Xue, L. Qiao and F. Wang, "Review of Small-Signal Converter-Driven Stability Issues in Power Systems," IEEE Open Access Journal of Power and Energy, vol. 9, pp. 29-41, 2022.*

[6] *L. Fan, C. Zhu, Z. Miao and M. Hu, "Modal Analysis of a DFIG-Based Wind Farm Interfaced With a Series Compensated Network," IEEE Transactions on Energy Conversion, vol. 26, no. 4, pp. 1010-1020, 2011.*

[7] *X. Xie, X. Zhang, H. Liu, H. Liu, Y. Li and C. Zhang, "Characteristic Analysis of Subsynchronous Resonance in Practical Wind Farms Connected to Series-Compensated Transmissions," in IEEE Transactions on Energy Conversion, vol. 32, no. 3, pp. 1117-1126, Sept. 2017.*

[8] *M. Beza and M. Bongiorno, "On the Risk for Subsynchronous Control Interaction in Type 4 Based Wind Farms," IEEE Transactions on Sustainable Energy, vol. 10, no. 3, pp. 1410-1418, July 2019.*

[9] *H. Liu et al., "Subsynchronous Interaction Between Direct-Drive PMSG Based Wind Farms and Weak AC Networks," IEEE Transactions on Power Systems, vol. 32, no. 6, pp. 4708-4720, Nov. 2017.*

[10] *M. Zhang, S. Xiao, T. Tian, et. al. "Analysis of SSO Influencing Factors and Parameter Adjustment for Grid-Connected Full-Converter Wind Farm Based on Impedance Sensitivity, " Power System Technology, vol. 42, no. 9, pp. 2768-2777, 2018.*

[11] *B. Shao, S. Zhao, J. Pei, et al. "Subsynchronous Oscillation Characteristic Analysis of Grid-connected DDWFs Via VSC-HVDC System. Power System Technology," vol. 43, no. 9, pp. 3344-3352, 2019.*

[12] *X. Guo, Y. Li, X. Xie, et al. "Sub-synchronous oscillation characteristics caused by PMSG-based wind plant farm integrated via flexible HVDC system," Proceedings of the CSEE, vol. 40, no. 4, pp. 1149-1160, 2020.*

[13] *Sun K, Yao W, Wen J. "Mechanism and characteristics analysis of subsynchronous oscillation caused by DFIG-based wind farm integrated into grid through VSC-HVDC system," Proceedings of the CSEE, vol. 38, no. 22, pp. 6520-6533, 2018.*

[14] *W. Du, C. Chen and H. Wang, "Subsynchronous Interactions Induced by DFIGs in Power Systems Without Series Compensated Lines," IEEE Transactions on Sustainable Energy, vol. 9, no. 3, pp. 1275-1284, 2018.*

[15] *K. M. Alawasa, Y. A. -R. I. Mohamed and W. Xu, "Active Mitigation of Subsynchronous Interactions Between PWM Voltage-Source Converters and Power Networks," IEEE Transactions on Power Electronics, vol. 29, no. 1, pp. 121-134, 2014,*

[16] *W. Du, X. Chen and H. Wang, "PLL-Induced Modal Resonance of Grid-Connected PMSGs With the Power System Electromechanical Oscillation Modes," IEEE Transactions on Sustainable Energy, vol. 8, no. 4, pp. 1581-1591, 2017.*