Proceedings of the 2nd International Conference on Mechatronics and Smart Systems
DOI: 10.54254/2755-2721/62/20240448

Impact factor on the measurement stability of Roche's coil

Tianye Liang[1], Yangcheng Zhou[2,4], Tianye Zhu[3]

[1]School of Electrical and Information Engineering, Zhengzhou University, Zhengzhou 450001, China
[2]School of Electrical and Information Engineering, Anhui University of Science and Technology, Huainan 232001, China
[3]School of Electrical Engineering and Automation, Nanjing Normal University, Nanjing 210023, China

[4]zhouyangcheng@ldy.edu.rs

Abstract. Compared with the traditional electromagnetic current sensor, Roche coil has advantage in no magnetic saturation phenomenon, simple structure, and has been widely used in current measurement. However, the measurement accuracy, bandwidth and sensitivity of Roche coils are still affected by a variety of factors, and the problem in ensuring the stability of the measurement system of Roche coils still remains to be a problem nowadays. This article is a review of how each factor affects the measurement stability of Rochester coils. In addition, Roche coils also have certain limitations, such as not being able to directly measure the size of the DC current for the principle of current mutual inductance , in order to make Roche coils to obtain a wider range of applications, this article mentions the zero-drift adjustment method, the method of AC superposition, the use of differential coils, and the method of the Hall effect sensor, which are of guiding significance for the future design of Roche coils capable of measuring DC currents.

Keywords: Roche coil, measurement system stability, current mutual inductance, DC current Foreword

1. Introduction

In order to promote the construction of a "clean, low-carbon, safe and efficient" modern energy system, and to achieve the "dual-carbon" target requirements, wind power and photovoltaic construction continue to speed up. At the same time, the new energy supporting energy storage components are also developing rapidly, and power equipment is updating as time goes by. The development of new energy can reduce dependence on traditional fossil fuels, decrease the cost of energy, but also to lessen environmental pollution, slow climate change, and improve energy security , with the new energy in all aspects of life in the rapid popularity of current measurement in all aspects of the rapid increase in the various modes of electricity, power supply or new energy power supply research and development need more accurate and more rigorous current measurement data. As a result, current sensors are facing new challenges.

The stability of the electric power is a matter of national economy and people's livelihood, it is vital to ensure the safe operation of the power system. Therefore, it is necessary to monitor the status of power

© 2024 The Authors. This is an open access article distributed under the terms of the Creative Commons Attribution License 4.0 (https://creativecommons.org/licenses/by/4.0/).

DOI: 10.54254/2755-2721/62/20240448

equipment, such as power production, conversion or transmission equipment, in order to obtain information and deal with abnormal conditions in time. When potential defects and faults occur in power equipment, the measurement of short-circuit transient current by current transformers is closely related to the safe operation of the power system. When a fault such as a short circuit suddenly occurs during the operation of the system, a transient high current will be generated. Therefore, the current sensor needs to accurately and quickly measure the fault current. At the same time, the power system transmission and transformation are changing towards the direction of the ultra-high voltage development, carrying capacity is getting bigger and bigger, the power equipment also appear more and more large inrush current. Traditional current sensors can no longer meet the new power system intelligent, digital development needs. Different types of equipment require different dynamic measurement range, current sensors need to meet the actual application requirements. Roche coil as a current sensor which is widely used in reality, its function of upgrading has also become a pressing need. At present, the application of Roche coils has been involved in various fields such as shop, medical and industrial. In the field of measurement and monitoring, the monitoring system hardware mainly includes sensors, signal conditioning modules and data acquisition modules. Among them, the sensor part mostly adopts Roche coil [1], which is easy to use and it is production cost is very low, and also has the characteristics of electrical isolation, non-destructive measurement, wide bandwidth and fast corresponding [2-4]. Its application is not only limited to the measurement of current, but also the measurement of the size of the magnetic field, in addition, it will also use its electromagnetic induction principle to generate a magnetic field, such as electromagnetic steelmaking, electromagnetic silicon carbide heater, in addition, when it is involved in magnetic resonance imaging, it would act as a receiving coil, at the same time, it will also play the role of the transmitting coil. The hardware of the monitoring system mainly includes sensors, signal conditioning modules and data acquisition modules. The sensor part mostly adopts Roche coil [5-7], which is easy to use and cost little, and has the advantages of electrical isolation, non-destructive measurement, wide bandwidth, and fast response.

Although China has made an in-depth study of the Roche coil, but we still stay in the theoretical and experimental aspects, and it has not been widely used. There is still a big gap between domestic and foreign industrialisation. Different applications have different performance requirements, the current Roche coil is still easily affected when it measures , resulting the lack of stability, measurement will not be accurate enough, in addition to its measurement has limitations, such as for the DC part of the current cannot be measured by the principle of electromagnetic induction, so in the measurement of the existence of the DC component of the current needs to be measured with the help of other equipment for the use of the common, and the integral circuit There are limitations on the measurement range, so for the adaptability of a wider range of flexible coils, these various problems will bring the Roche coil measurement system to consume more energy, the size and weight increase, the manufacturing cost becomes high, not stable enough to make its reliability will also be questioned, in order to adapt to the electric power system and other applications, to get rid of China's dependence on imports of Roche coils, Roche coils need to be made in further research. In order to adapt to the requirements of power systems and other applications, to get rid of our dependence on imported Roche coils, further research on Roche coils is needed [8-10].

In general, the article will describe respectively on the artificial winding, coil interference around the magnetic field, damping resistance and non-ideal components of how to affect the measurement stability of the Roche coil for an overview, and in the solution of how to solve the inability to measure the limitations associated with the DC component current put forward have and some theoretical views, introduce the corresponding problem of the solution, analyse the advantages and disadvantages, and finally put forward the future direction of the research.

2. Instability caused by manual winding

In actual measurements, it is difficult to achieve complete coincidence of the measured current conductor with the coil axis, and specific calculations are made to show whether this non-ideal situation will have an effect on the measurement results. In order to facilitate the calculation, the coil is divided

DOI: 10.54254/2755-2721/62/20240448

into left and right sides along the measured current conductor in the vertical direction, as shown in Figure 1.

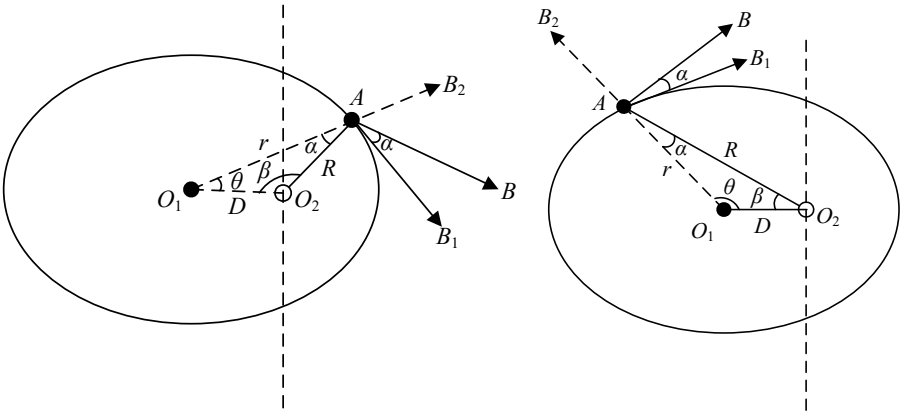

Figure 1. Schematic diagram of interference near and far from the coil [1].

It is derived from the cosine theorem that

$$R = \sqrt{D^2 + r^2 - 2Dr\cos\theta} \tag{1}$$

Combined with the sinusoidal theorem

$$\mathrm{R} = \left(D^2 + r^2 - 2Dr\cos\theta\right)^{\frac{1}{2}} \tag{2}$$

Then,

$$\sin\beta = \frac{\mathrm{r}}{(D^2 + r^2 - 2Dr\cos\theta)^{\frac{1}{2}}}\sin\theta \tag{3}$$

$$\cos\beta = \frac{\mathrm{D} - \mathrm{r}\cos\theta}{(D^2 + r^2 - 2Dr\cos\theta)^{\frac{1}{2}}} \tag{4}$$

By Ampere Loop Law,

$$\oint \mathrm{Bdl} = \mu\mathrm{I} \tag{5}$$

Therefore,

$$B = \frac{\mu\mathrm{I}}{2\pi\mathrm{R}} \tag{6}$$

So,

$$\mathrm{B}_1 = \mathrm{B}\cos\alpha = \frac{\mu\mathrm{I}}{2\pi}\frac{\mathrm{r} - \mathrm{D}\cos\theta}{\mathrm{D}^2 + \mathrm{r}^2 - 2\mathrm{Dr}\cos\theta} \tag{7}$$

It is assumed that the coil is wound evenly,and let the angular density of the coil be

$$\mathrm{n} = \frac{\mathrm{N}}{2\pi} \tag{8}$$

Then,

$$\mathrm{d}\varphi = \mathrm{nB}_1\mathrm{Sd}\theta = \frac{\mu\mathrm{nIS}}{2\pi}\frac{\mathrm{r} - \mathrm{D}\cos\theta}{\mathrm{D}^2 + \mathrm{r}^2 - 2\mathrm{Dr}\cos\theta}\mathrm{d}\theta \tag{9}$$

DOI: 10.54254/2755-2721/62/20240448

From above,

$$\varphi = -2\int_0^{\pi} \frac{\mu nIS}{2\pi} \frac{r - D\cos\theta}{D^2 + r^2 - 2Dr\cos\theta} d\theta = -\frac{\mu nIS}{r} = -\frac{\mu NIS}{2\pi r} \tag{10}$$

It can be seen from equation (1),

$$e(t) = \frac{d\varphi}{dt} = -\frac{\mu NS}{2\pi r}\frac{dI}{dt} \tag{11}$$

By observing the results of equation (11), it is easy to find that the results are the same as the theoretical induced electromotive force of the Roche coil, which can be seen, such as if the coil is uniformly wound, the measured current conductor off the centre of the coil and other interfering factors can be ignored and do not affect the measurement results. However, in the actual production of Roche coils, it is often impossible to do a completely uniform winding, which may lead to changes in the correlation coefficient of Roche coils. Not only does the uniformity of the coil winding affect the mutual inductance coefficient, but due to the limitations of the current process, the thickness of the PCB board is usually only about 3mm, and the size of the copper void in the aperture is 0.5mm, so the voltage signal generated by a single coil is very weak, only in the millivolt level. This makes it easy for external magnetic fields and other interfering factors to interfere and reduce its sensitivity. Therefore, it is necessary to increase the mutual inductance of the coil to improve its resistance to external disturbances and thus increase its sensitivity in measuring loop current [1].

According to the Roche coil manufacturing principles : skeleton finishing, cross-sectional area of uniform size should be constant, line turns uniformly close in the non-magnetic skeleton winding, and do not overlap each other to cover, the line turns itself to achieve thickness, width uniformity; each turn of the coil and the entire toroidal coil axis perpendicular, that is, perpendicular in the direction of the flux and the symmetry of the axis of the coil, the coil plane uniform uniformity is good, and the central axis of the coil is perpendicular to the centre of the coil everywhere. In this principle designed a new type of Roche coil - PCB type Roche coil, also known as printed circuit board PCB type Roche coil [2]. In the formula, N for the density of winding turns of wire, h for the thickness of the coil, but corresponds to the Roche coil in the actual problem for the thickness of the PCB board, b and a for the inner and outer diameters of the winding coil winding wire respectively. By the mathematical model can be obtained from the mutual inductance M is proportional to the thickness of the PCB board h, the density of the winding wire N, W and, thus, we can discuss ways to increase the mutual inductance from the corresponding aspects:

1) Increase the thickness b, due to the problem of the utilisation of perforations, as well as the constraints of the production process, the thickness is generally taken as 3 mm or so, with a variation of 15%.
2) Increase the number of windings turns N, so that the measurement of internal resistance becomes smaller, thus increasing the mutual inductance M, the larger the number of coils turns, the greater the mutual inductance. The number of turns of wiring is directly reflected in the wiring copper clamps, to get more turns, the wire should be better fine, the holes need to be more dense , subject to the limitations of the production process as well as the limitations of the given PCB board area, it usually can not reach the ideal increase.
3) Increase the value, that is, increase the ring 1.6-2.4, can be understood as in the case of a certain inner diameter to increase the size of the outer diameter, or in the case of the size of the outer diameter remains unchanged to reduce the size of the inner diameter, where the inner diameter is at least greater than 0. In both the measurement accuracy and production process constraints, the most reasonable range of the outer diameter of the b / a should be 1.6-2.4 between.

Although the production process of PCB Roche wire map itself has been very advanced, which can be completely manufactured by advanced machine wiring, coil skeleton is also stronger, and thermal expansion coefficient is more ideal, but as the coil itself it is also subject to the coil's own structural constraints. Compared with the ordinary Roche coils, PCB type Roche hollow coils have greatly

DOI: 10.54254/2755-2721/62/20240448

improved the measurement performance, which advances the field of current transformer measurement improvement. Theoretically, the methods of increasing the mutual inductance of the system have been discussed above, but these methods of increasing the mutual inductance are limited by the actual manufacturing process, and the ability to optimise the coil parameters is very limited [2].

3. Interference magnetic field around the coil

There is a complex interference magnetic field around the Rogowski coil, which can be locally decomposed into components parallel and perpendicular to the coil plane. Vertical component interference magnetic field: The direction of the vertical component is parallel to the planes of each small wire loop on the frame, so no induced electromotive force will be generated on each small wire loop. However, it is perpendicular to the plane where the large wire loop is located, so an interference electromotive will be generated at both ends of the large wire loop, as shown in Figure 2.

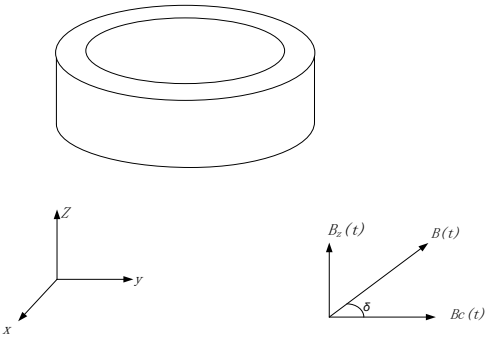

Figure 2. Decomposition of interference magnetic field [2]

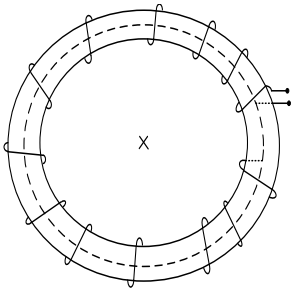

Figure 3. Coil winding [3]

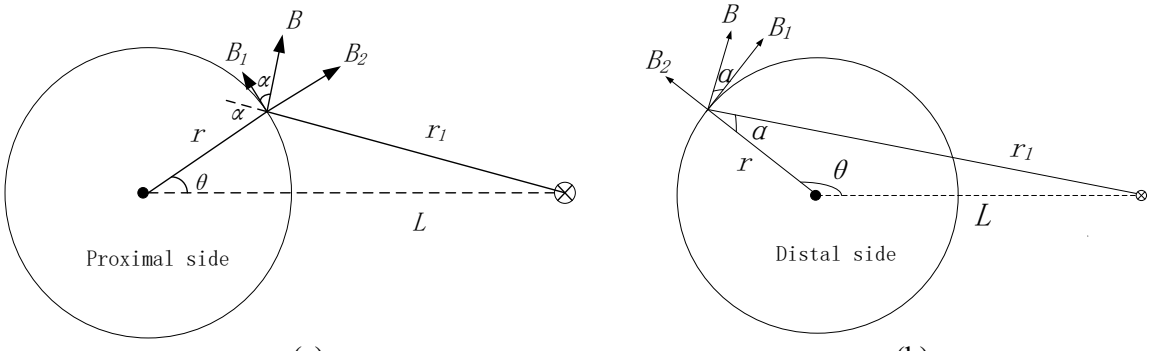

(a) (b)

Figure 4. Horizontal component interference magnetic field [3]

DOI: 10.54254/2755-2721/62/20240448

The direction of the vertical component $B_z(t)$ is parallel to the planes of each small wire loop wound on the frame, so no induced electromotive force will be generated on each small wire loop. However, the direction of $B_z(t)$ is perpendicular to the plane where the large wire loop is located, so the interference electromotive force e_1 (t) will be generated at both ends of the large wire loop. To eliminate the induced interference electromotive force e1(t), the method of reversing the direction of "wrapping" the large wire loop once is adopted [7], as shown in Figure 3. The direction of "wrapping" line is opposite to the winding direction of the large wire loop, so the induced electromotive force $e_2(t)$ on the "wrapping" line is equal in size and opposite in direction to $e_1(t)$, which can cancel each other out. Therefore, the vertical component of the interference magnetic field will no longer affect the measurement results of the Rogowski coil [8].

Horizontal component interference magnetic field: Using the interference magnetic field generated by a conductor perpendicular to the plane of the Rogowski coil as a model, we analyze the influence of the parallel component of the interference magnetic field on the measurement results of the Rogowski coil [5]. For ease of calculation, we study the upper half of the coil, and divide the interference conductor into "near" and "far" sides relative to the Rogowski coil. "Near" refers to the direction of the radius extension of the coil at that point, which is on the same side as the direction of the magnetic induction strength at that point. "Far" refers to the direction of the radius extension of the coil at that point, which is on the opposite side to the direction of the magnetic induction strength at that point. The "near" side refers to the direction of the radius extension of the coil at that point, which is on the same side as the direction of the magnetic induction strength B at that point, while the "far" side refers to the direction of the radius extension of the coil at that point, which is on the opposite side to the direction of the magnetic induction strength B at that point, as shown in the figure 4.

In near-range measurement,

$$\alpha = \theta + \tan^{-1}\frac{r\sin\theta}{L - r\cos\theta} \tag{12}$$

$$\cos\alpha = \frac{L\cos\theta - r}{(L^2 + r^2 - 2Lr\cos\theta)^{\frac{1}{2}}} \tag{13}$$

Then,

$$B = \frac{\mu I}{2\pi r_1} = \frac{\mu I}{2\pi(L^2 + r^2 - 2Lr\cos\theta)^{\frac{1}{2}}} \tag{14}$$

$$d\varphi = nBS\frac{L\cos\theta - r}{(L^2 + r^2 - 2Lr\cos\theta)^{\frac{1}{2}}}d\theta \tag{15}$$

Integrated counterclockwise,

$$\varphi_1 = \int nBS\frac{L\cos\theta - r}{(L^2 + r^2 - 2Lr\cos\theta)^{\frac{1}{2}}}d\theta \tag{16}$$

In far-range measurement,

$$\alpha = \pi - \left(\theta + \tan^{-1}\frac{r\sin\theta}{L - r\cos\theta}\right) \tag{17}$$

$$\cos\alpha = \frac{L\cos\theta - r}{(L^2 + r^2 - 2Lr\cos\theta)^{\frac{1}{2}}} \tag{18}$$

So,

DOI: 10.54254/2755-2721/62/20240448

$$d\varphi = -nBS\frac{L\cos\theta - r}{(L^2 + r^2 - 2Lr\cos\theta)^{\frac{1}{2}}}d\theta \tag{19}$$

Integrated counterclockwise, because the direction of the magnetic induction strength B is opposite to the integration direction,

$$\varphi_2 = -\int -nBS\frac{L\cos\theta - r}{(L^2 + r^2 - 2Lr\cos\theta)^{\frac{1}{2}}}d\theta = \int nBS\frac{L\cos\theta - r}{(L^2 + r^2 - 2Lr\cos\theta)^{\frac{1}{2}}}d\theta \tag{20}$$

In reference [8], an interference analysis of the magnetic field in the "near" and "far" directions is conducted. From equations (16) and (20), despite the different relationships between α and θ in the near and far regions, after simplification, the integral expressions are identical. Therefore, the magnetic linkage of the magnetic field throughout the entire coil is

$$\varphi = 2\int_0^{\pi} nBS\frac{L\cos\theta - r}{(L^2 + r^2 - 2Lr\cos\theta)^{\frac{1}{2}}}d\theta \tag{21}$$

Therefore, the parallel component of the interference magnetic field has no effect on the measurement result of the coil in a uniform state of turn density N and cross-sectional area S.

The interference magnetic field is generated due to the non-perpendicular relationship between the conductor carrying the measured current and the coil plane. The literature [7] also analyzes by decomposing into vertical and horizontal components as mentioned earlier. The vertical component can also be eliminated by reversing the direction of the large wire loop once. The current vertical component generates a magnetic field parallel to the coil plane, which induces an electromotive force on the coil. Assuming the angle between the conducting wire carrying the current and the coil plane is δ [8] and refer to Figure 2, so that:

$$e(t) = -M\frac{dI_2(t)}{dt} = -M\sin\delta\frac{dI(t)}{dt} = -M'\frac{dI(t)}{dt} \tag{22}$$

where M' is the effective mutual inductance coefficient between the coil and the tilted conducting wire, is equal to Msinδ, which is less than M. Therefore, when the conducting wire is tilted, the effective mutual inductance coefficient between the coil and the conducting wire decreases, resulting in a decrease in the induced electromotive force for the same magnitude of measured current.

4. Influence of damping resistance and on Rogowski coils

4.1. Influence of damping resistance on Rogowski coils

The formula for the optimal damping resistance is

$$R_a = \left(\frac{L}{C_0}\right)^{\frac{1}{2}} \tag{23}$$

As can be seen from the above formula, R_a will depend on the electromagnetic parameters L and C0 of the coil, and the electromagnetic parameters L and C_0 of the coil will be affected by the structural parameters of the coil such as the wire diameter, number of turns, and gap distance between coil layers. The central diameter D, cross-sectional shape, and size all affect the dynamic characteristics of a Rogowski coil. Therefore, to obtain the optimal damping resistance R_a for a Rogowski coil, it is necessary to first select reasonable electromagnetic and structural parameters for the coil.

Some scholars have simulated the equivalent circuit of the Rogowski coil during external integration based on the work status shown in Figure 5. Three cases were simulated with coil resistance of 75Ω, 775Ω, and 7750Ω, corresponding to overdamping, optimal damping, and underdamping states. The

DOI: 10.54254/2755-2721/62/20240448

simulation results are shown in the figure 5 [9]. The simulation results show that the damping resistor mainly affects the waveform of the output waveform. When the coil is working in an underdamped state, it will produce oscillations in the waveform, and when the measured impact waveform becomes steeper, it will greatly increase the amplitude of the oscillation in the waveform. When the coil is working in an overdamped state, the system has a longer delay, and the measured waveform will lag behind the original waveform. Therefore, in order to achieve a better transient response characteristic for the measurement system, the damping resistor should not be too large or too small. It should be set as close to the optimal damping resistance value as possible.

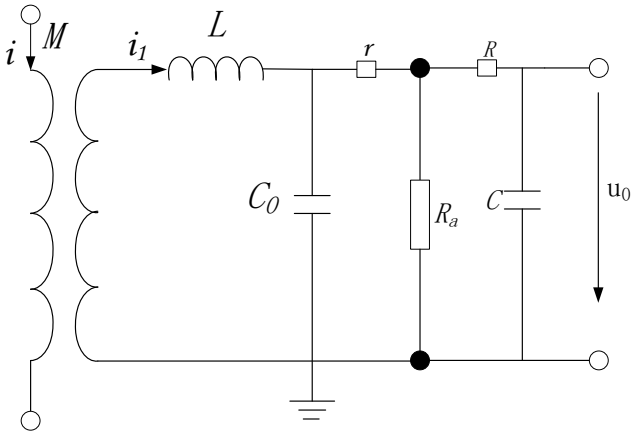

Figure 5. Equivalent circuit of Roche's coil [9].

4.2. Influence of non-ideal components on Rogowski coils

The premise of the measurement method for the Rogowski coil in the external integration equivalent circuit in assumes that the integrating resistor and integrating capacitor are ideal components. However, resistors and capacitors are non-ideal and have a limited frequency range of operation. Table 1 are models of the frequency response of resistors, inductors, and capacitors at high and low frequencies. As can be seen from the model diagram, resistors, inductors, and capacitors all experience non-ideal operation in the high frequency region.

1) Resistors of the same category can have significant differences in frequency characteristics due to variations in resistance value. As the frequency increases, the impedance caused by stray capacitance reduces the resistance of high-value resistors, while the resistance of low-value resistors increases due to the influence of lead inductance.
2) There will be series resonance in the actual capacitor when the angular frequency is $1/\sqrt{LC}$. At this point, the impedance of the capacitor is at its minimum. After passing the resonance point, the impedance characteristic of the capacitor starts to behave like an inductor, increasing with frequency.
3) Commonly used through-hole capacitors, due to the presence of lead inductance, can experience self-resonance phenomenon at high frequencies. As the capacitance value increases, the self-resonance frequency decreases. When the operating frequency exceeds the self-resonance frequency, the capacitor will no longer behave as a capacitance and will instead behave as an inductance component.

Therefore, when these electronic components fail to operate in an ideal manner in the circuit, their effect will be different from the originally designed intention, which will affect the measurement of the Rogowski coil.

DOI: 10.54254/2755-2721/62/20240448

Table 1. Models of the frequency response

Element	Low Frequency	High Frequency	Frequency Response
Resistance		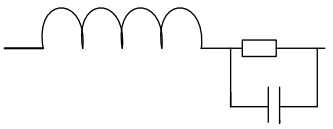	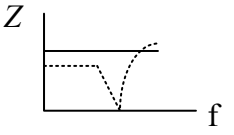
Inductance		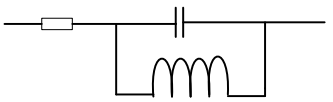	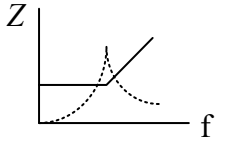
Capacitance	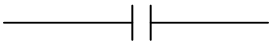	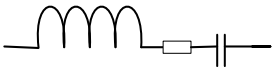	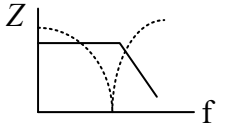

5. Limitations and Improvement Methods of Rogowski coil measurement

Rogowski coils are commonly used to measure AC currents. The principle is to use the magnetic field generated by the current passing through the coil to measure the current by detecting changes in the magnetic field. However, for measuring DC currents, there will be errors in the measurement results due to the absence of a changing magnetic field. This is also one of the major manifestations of the linearity of the Rogowski coil measurement. Although the measurement accuracy may not be as good as with AC, there are still some methods that can be used to measure DC with Rogowski coils to a certain extent. Here are a few common methods:

Zero-drift adjustment method: By applying a known size and direction of DC current to the Rogowski coil, and then adjusting the zero-drift of the Rogowski coil to make the output voltage zero. This way, when measuring actual DC current, you can consider the effect of zero-drift, thereby reducing error.

AC superposition method: The DC current is superimposed with a high-frequency AC current, and then a Rogowski coil is used to measure the total current. As the Rogowski coil responds well to AC current, the total current can be accurately measured. Then, by separately measuring the high-frequency AC current and subtracting it from the total current, an estimated value of the DC current can be obtained.

Using differential coils: Differential coils are two Rogowski coils connected in series with opposite directions. In this way, a DC current generates equal but opposite magnetic fields in the two coils, resulting in a zero voltage output. As long as the DC current remains constant, the output will remain near zero. However, this method is still limited by the accuracy and stability of the coils.

Using Hall effect sensors: Hall effect sensors are widely used devices for measuring DC currents. They utilize the Hall effect to measure the magnetic field generated by the current without being affected by the DC current itself. Therefore, Hall effect sensors are generally a more accurate and reliable choice when measuring DC currents. In addition, the stability and measurement accuracy of the Rogowski coil are very important aspects of the entire system. If they cannot be guaranteed, the Rogowski coil system will be very limited in its use. The measurement accuracy of the Rogowski coil directly affects the accuracy of the entire measurement system. If there are problems with coil stability or low measurement accuracy, it can lead to systemic errors that affect the measured current value. A stable Rogowski coil can provide reliable AC current signals, which is crucial for subsequent signal processing and analysis, such as spectrum analysis, power measurement, etc. To ensure stability and measurement accuracy, it is necessary to perform regular calibration and verification at the human level to ensure the accuracy and reliability of the Rogowski coil. Calibration can help identify issues with coil stability and measurement accuracy and correct them accordingly.

Additionally, the following are potential ways to improve the stability and measurement accuracy of Rogowski coils:

DOI: 10.54254/2755-2721/62/20240448

1) By optimizing the structure and material selection of the Rogowski coil, its stability and measurement accuracy can be improved. Reducing the coil's distributed capacitance and internal resistance can effectively improve its high-frequency characteristics, increasing the coil's self-inductance can reduce the low-frequency cutoff, while reducing the terminal resistance can increase the coil's bandwidth but decrease its sensitivity. Moreover, reducing the ratio of the coil's internal and external diameters can reduce the effect of eccentricity during measurement. Additionally, to improve sensitivity, the number of turns in the coil should not be too large, and it is necessary to increase the wire diameter as much as possible [8].
2) Temperature changes are one of the important factors that affect the stability and measurement accuracy of Rogowski coils. By using temperature sensors to monitor the ambient temperature and performing real-time compensation based on temperature changes, the impact of temperature on the measurement results can be reduced.
3) Electromagnetic interference is one of the main reasons that affect the measurement accuracy of Rogowski coils. In low-frequency (below 100 kHz) electromagnetic shielding applications, to measure high-frequency local discharge signals more effectively, iron magnetic materials or metal conductor materials with high magnetic permeability are commonly used as shielding structures [9]. Highly conductive metal materials can provide good shielding against both high-frequency and low-frequency electromagnetic fields and static electric fields [10].
4) Signal processing algorithms can improve the measurement accuracy of Rogowski coils. By optimizing the signal processing algorithm, the impact of noise and interference on the measurement results can be reduced, and the measurement accuracy can be improved.

In summary, by optimizing coil design, controlling temperature changes, reducing electromagnetic interference, improving signal processing algorithms, and performing regular calibration and maintenance, the stability and measurement accuracy of Rogowski coils can be improved.

6. Conclusion

This article provides a comprehensive review of the various factors affecting the stability of measurement systems using Rogowski coils and proposes a series of solution strategies. The feasibility and advantages or disadvantages of these solutions are evaluated, and future optimization directions are discussed. As an essential electronic component in power systems that measures the current feedback signal response status, the design and development of Rogowski coils have good development and application prospects. In practical applications, it is also necessary to pay attention to various parameters of the components, select the most suitable sensors and installation locations to maintain the normal operation and work of the entire system.

Authors Contribution

All the authors contributed equally and their names were listed in alphabetical order.

References

[1] SAMIMI M H, MAHARI A, FARAHNAKIAN M A, et al. The Rogowski coil principles and applications: A review [J]. *IEEE Sensors Journal*, 2015, 15(2): 651-658.
[2] FU Shi,DENG Erping,PENG Cheng, et al. Method of turns arrangement of noncircular Rogowski coil with rectangular section [J]. *IEEE Transactions on Instrumentation and Measurement*, 2021(70): 1-10.
[3] HUANG Yonggang. Experimental study on non-ideal work situation of Rogowski coil [J]. Electronic Measurement Technology, 2018, 41(5):38-41.
[4] REN Honglin, ZHANG Yuhong. A new diakoptics-based algorithm for the simulation of Rogowski coil [J]. High Voltage Engineering, 2007,33(4): 57-60.
[5] Chen Chengwei, Sun Yue, Wang Kaiqi, et al. Analysis of Non-ideal Operating Conditions of Roche's Coil [J]. Electric Automation, 2015 (4): 72-73.

DOI: 10.54254/2755-2721/62/20240448

[6] Zhang Shiwen. Study on Several Problems of Roche's Coil. Electromagnetic Field and Microwave Technology, 2015: 21-23.
[7] Pan Yiling and Luo Kunming. Design of a five-story elevator control simulation system based on MCGS and Mitsubishi PLC [J]. Journal of Huzhou Vocational and Technical College, 2013, 11(3): 68-72.
[8] Zhang Dayian, Chen Shuiqing, Tu Youping, Wang Hui. Effects of non-ideal characteristics of damping resistor and components on external integration Roche's coil, 2010, 27(4).
[9] Jiang Jinbo, Chen Guifeng, Luo Zheng, Fang Chunhua, Zou Yun'an, and Zhao Lei. Study and Design of a Roche's Coil for Measuring Partial Discharge Signals. 2023.
[10] Yang Zhiren, Song Kunyu, and Zhou Lixing. Design and research of a magnetic shielding box for Roche's coil [J]. *High Voltage Apparatus*, 2018, 54 (12): 158-164.