Proceedings of the 2nd International Conference on Mechatronics and Smart Systems
DOI: 10.54254/2755-2721/62/20240442

Investigating safety precautions for linking photovoltaic and wind power generation to the grid

Geyu Huang

Department of Automation, North China Electric Power University, Baoding, 071066, China

220211110311@ncepu.edu.com

Abstract. The grid integration of renewable energy sources such as solar and wind power has received significant research attention, however, there remains a vast scope for exploration and improvement. Specifically, the discourse around relay protection and safety automatic devices in these power generation methods has been somewhat limited during the grid connection process. This article endeavors to investigate the technical obstacles encountered by photovoltaic and wind power grid protection mechanisms and crucial equipment, amidst the steady growth of renewable energy's share in the power grid. This exploration is considered advantageous. The aim is to study and summarize existing research on protective measures and automation equipment for photovoltaic and wind power generation during grid connection, to promote technological innovation and development in this field. This paper critically assesses studies conducted so far on the topic of relay protection and automation hardware used in grid-connected solar and wind power generation, underscoring the significance of different protection techniques and their pivotal roles in ensuring system safety during grid connectivity. It then dives into the present obstacles and constraints that these technologies contend with. In conclusion, it suggests a few potential areas and anticipations for prospective research.

Keywords: Photovoltaics, wind power generation, relaying, automatic safety device.

1. Introduction

Environmental issues and global climate change are becoming progressively severe. Remarkably, China's total carbon dioxide emissions can attribute 88% of it to the energy sector. Of this, over 40% of the emissions hail from the power industry. If "carbon peak and carbon neutrality" is to be achieved, the energy sector is the primary area of concern and the power industry is the principal focus. The necessity to encourage the decrease of carbon emissions in the power sector and construct a novel power system, primarily based on new energy, is undeniable. The significance of renewable energy is steadily growing, with human reliance on clean power sources like solar and wind energy for electricity generation escalating. Nonetheless, when compared to conventional thermal and fuel power generation, renewable energy power generation equipment encounter numerous distinct technical problems during the process of connecting to the grid. The access of new energy requires power electronic equipment. Through the use of photovoltaic inverters, frequency converters, and other similar devices, power electronic technology enables the optimal use of solar and wind energy. This enhances the efficiency of photoelectric conversion and improves adaptability. Electric power technology is also extensively

© 2024 The Authors. This is an open access article distributed under the terms of the Creative Commons Attribution License 4.0 (https://creativecommons.org/licenses/by/4.0/).

DOI: 10.54254/2755-2721/62/20240442

implemented in energy storage systems, for instance in converters and other devices, to enable the transformation of direct current into alternating current. This meets the requirements for power grid load and enhances the efficiency of electricity use.

Power electronic equipment has problems such as resonance caused by interaction with the system during grid connection, and low inertia characteristics of wind and photovoltaic units [1-5]. Compared to traditional electromagnetic conversion equipment, power electronic conversion equipment poses greater challenges to grid stability. Hence, for the grid integration task involving photovoltaic and wind power generation, it's imperative to utilize efficient relay protection and automation equipment to maintain the overall power system's stability and safety. The primary protective measures for distributed photovoltaic power generation include limit protection, longitudinal protection, wide area protection, and adaptive protection. Conversely, for double-fed wind power generation, the protective methods encompass longitudinal protection, overcurrent protection, differential protection, and distance protection.

Numerous articles [1-10] in recent years have provided detailed explanations on linking photovoltaic, wind, and hydropower generation to the grid, which have analyzed the basic principles, technical challenges, and solutions of grid connection from different perspectives. Nonetheless, only a small number of articles emphasize the significance of relay protection and safety automatic devices in the grid connection stage. This factor is crucial for the dependable functioning of power systems. Although there have been some research results in this field, there is not much content on their summary and integration. This article seeks to encapsulate the available research findings, delve into the fundamental faults in photovoltaic and wind power grid connections, examine the features and current state of protection tactics, interrogate the issues present in these safety measures, and suggest improvements for the security of photovoltaic and wind power grid connections. Eagerly anticipating the advancement and upcoming progression of protection measures for grid connections in photovoltaic and wind power generation.

With the rapid development of the photovoltaic and wind energy industries, this topic is becoming increasingly important. Not only does the research and development of relay protection and automation technology enhance the reliability and safety of power systems, it also fosters the widespread use and acceptance of renewable energy. It is expected that this article will provide a broad and in-depth perspective for subsequent researchers to understand and solve the problems that may be encountered during the integration of photovoltaic and wind power into the power grid more comprehensively.

2. Basic fault types of photovoltaic and wind power grid connection

2.1. Basic fault types of grid connected distributed photovoltaic power generation Formatting the title

Distributed power sources display varying output characteristics under normal and faulty situations within the power grid. The predominant faults typically encompass a reduction in power quality due to an amplified number of distributed power sources linked to the low-voltage power grid, unbalanced microgrid converters, the distributed power sources' short-circuit output current, and the requirement to uphold the grid-connected voltage [1]. During faults, the voltage connected to the grid is unbalanced, leading to issues with the quality of the output voltage of every parallel inverter. The system has problems with cycling under nonlinear loads, and there are problems with islanding microgrid faults. In distributed photovoltaic power plants, there are three main types of basic faults: box transformer faults, inverter faults, and grid-connected breaker faults.

2.2. Basic fault types of grid connected doubly fed wind turbines

Fundamental issues associated with double-fed wind turbines involve complications linked to short-circuit currents, equivalently and non-equivalently faulty power grids, and characteristics of faults in grid-connected tie lines. These issues are primarily exhibited through restrained fault current amplitude, imbalanced impedance between positive and negative sequences, and regulated phase angles [2]. The faults discussed in this article are mainly low-voltage ride-through problems.

DOI: 10.54254/2755-2721/62/20240442

3. Characteristics and current status of protection measures for grid-connected photovoltaic and wind power generation

3.1. Research characteristics and status of grid connected protection for distributed photovoltaic power generation

Analyzing faults in distributed power generation linked to the distribution grid varies from those in conventional distribution networks, making it tougher to identify the fault direction during short-circuit failures. As opposed to the single-power supply nature of traditional networks, the complexity of distributed power generation comes from its multi-power radial system, combined with elements like varying capacities and locations that influence the distribution network. Determining the flow direction of current during short-circuit faults can be complicated by several factors. Similarly, issues like excessive and bidirectional short-circuit current flow might arise with distributed power generation during short-circuit faults within the distribution network. Therefore, traditional protective systems for the distribution network can no longer be effectively applied [1,3,4]. The schematic diagram of the grid-connected photovoltaic power generation system's structure principle is depicted in Figure 1.

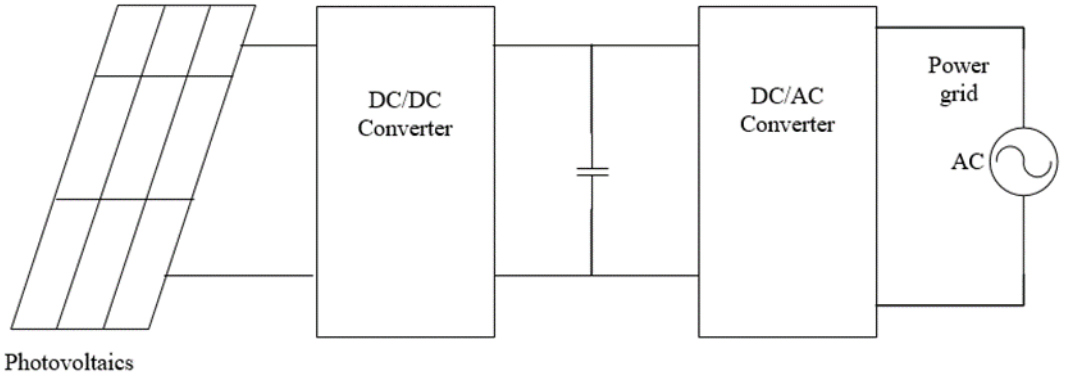

Figure 1. A Photovoltaic power generation system connected to the grid [1].

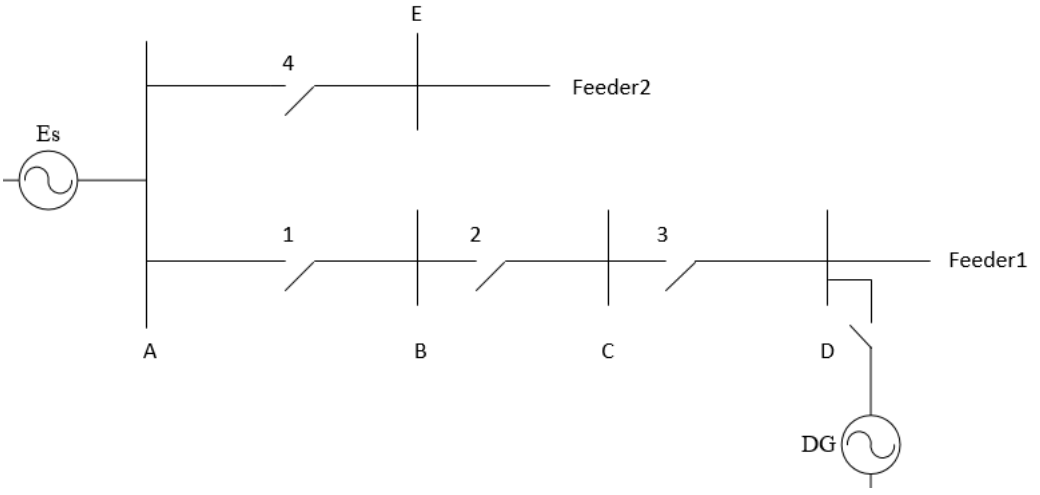

Figure 2. A DG connected to the bus terminal D at the end of feeder 1 [3].

Figure 2 portrays the layout of a dual-fed distribution network. In this setup, a distributed generator (DG) is attached to bus D located at the termination of feeder 1. The DG has the potential to connect to the bus at differing points along the feeder, a factor that could have an impact on current protection. During fault analysis, the DG is treated as a voltage-regulated current source.

DOI: 10.54254/2755-2721/62/20240442

3.2. Research characteristics and status of grid connected protection for doubly fed wind turbine

If the power grid malfunctions at the start of the wind power grid connection, the relay protection will initially disconnect the wind turbine generator system from the power grid. As wind power generation develops and its installed capacity expands, maintaining the initial power grid relay protection method during grid failure could exacerbate power system oscillation. In severe situations, this might result in a total system disconnection [5]. When the power grid fails, wind turbine generators, as opposed to conventional distribution networks, demonstrate varying fault transient characteristics, making it challenging to identify these traits in the power grid [6, 7]. Double-fed wind turbine generators, being the principal kind of wind power generation, impact relay protection in three significant ways: they have low voltage ride-through, non-power frequency traits, and weak feed characteristics [5].

4. Problems in protective measures for grid connection of power generation

4.1. Problems in grid connection protection measures for distributed photovoltaic power generation

The methods of protection for distributed power grid integration and traditional power grid protection exhibit certain differences and issues. For example, with regard to restrictive protection, limiting the capacity of distributed power access to the grid may result in lower utilization rates and fail to fully utilize the advantages of distributed power [8]. The safe and secure operation of the grid is difficult to maintain, as traditional protection schemes for relays are no longer completely appropriate.

At present, the absence of a universally applicable protection method, caused by limitations in various protection techniques, significantly hampers the progression of large-scale grid-connected distributed power generation [1].

4.2. Problems in grid connection protection measures for doubly fed wind turbines

The AC component within the short-circuit current discharged by the double-fed wind turbine diminishes in line with the rotor time constant. The variations created during the sampling and computation of the short-circuit current can impact the accurate functioning of the relay protection device [5]. In the event of a system failure, particularly during a grounding fault, the positive and negative sequence short-circuit currents are significantly lower than the zero-sequence short-circuit current. This results in the dual-fed wind turbine displaying a notably weak-feed power trait [5]. To restrict the short-circuit current and allow for low-voltage ride-through in the initial stages of a fault within the wind turbine generator system, a crowbar resistor is incorporated into the double-fed wind turbine. This resistor increases the equivalent impedance of the turbine's positive and negative sequences, strengthening the weak-feed attribute of the wind farm. This in turn, impacts the functionality of the relay protection device [9].

5. Improvement measures for protection measures of photovoltaic and wind power grid connection

5.1. Measures for grid connection protection of distributed photovoltaic power generation

Currently, domestic and international experts primarily focus on studying protective measures in the area of distributed power access within distribution network protection. These measures include restrictive protection, distance protection, and pilot protection [1]. To address the issue of excessive short-circuit current generated by distributed power during a short-circuit fault in the distribution network, solutions can encompass restrictive protection and the installation of fault current limiters (FCL) in the system[10].The circuit diagram of the new energy grid-connected terminal series, which is connected to the fault current limiter (FCL), is represented in Figure 3 [10].

The issue of varied output characteristics across different types of distributed power sources, as well as their ability to influence each other can be addressed by limiting short-circuit current output during faults. This can be achieved by using a fault current limiter in conjunction with an inverter [1]. There is a distance protection method for radial power distribution networks in Central Asia that addresses the

DOI: 10.54254/2755-2721/62/20240442

issue of bidirectional flow of short-circuit current in distributed power sources. This issue can impact the directionality and protection reliability of the power source [11].

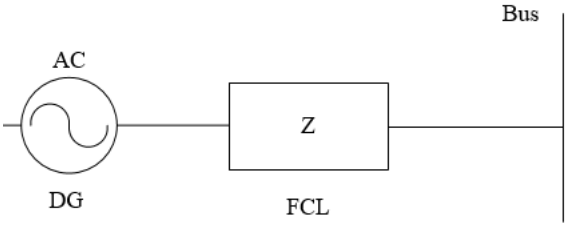

Figure 3. FCL series new energy machine [10].

5.2. Solution Measures for Relay Protection Problems of Doubly Fed Wind Turbines

Given the low short-circuit current provided by the double-fed wind turbine relative to the substantial power grid, the impact of non-power frequency parts in the short-circuit current diminishes. Even when internal faults occur, the reflex current of the guide current differential safeguard remains high, while the reactive current is null during external faults; hence, the guide current differential safeguard maintains dependable operation [5].

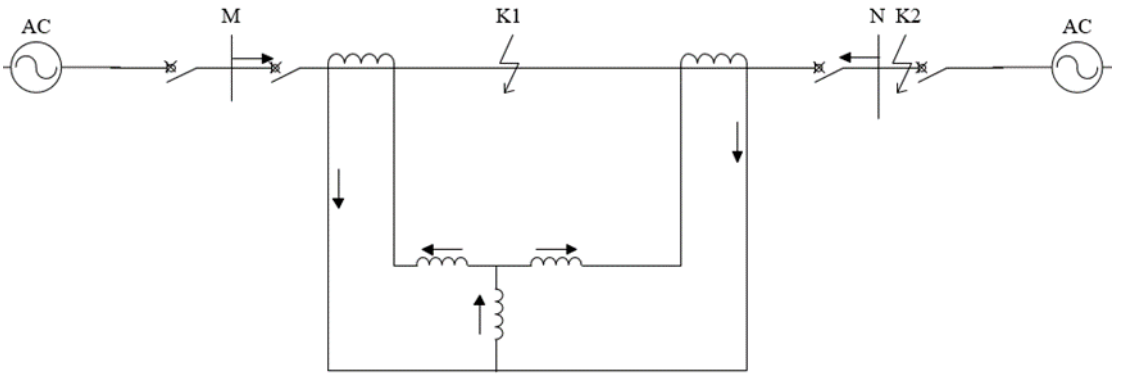

Figure 4. Basic principle of longitudinal differential protection [5].

Figure 4 illustrates that line MN represents the shielding area for longitudinal current differential protection. When there's a fault outside the zone (K2), or if the line continues to operate normally, the current's positive direction is determined by the flow from the bus to the line. The M side current is then considered positive according to this specified direction, while the N side current is deemed negative. Therefore, the electric currents on both sides have the same size but flow in contrary directions. This means that the current on the side MN fulfills the condition iy+1x=0. In the case of a fault in the in-zone (K1) of the line, the current direction on the M side is positive as per the defined positive direction, and the N side current is also positive. As a result, the currents on both sides are identical in terms of size and direction. The current on the side MN in this case meets the condition where iy + iy = i.The current difference protection is established through contrasting the currents on either side of the safeguarded component with the currents during in-zone and out-of-zone faults, according to the preceding analysis [5].

In the event of system failure or particular disruptions, the voltage at the junction between the wind turbine unit and the extensive power grid can decrease to a specific level [5]. The wind turbine's low-voltage ride-through capability is its capacity to maintain uninterrupted functioning and offer reactive

DOI: 10.54254/2755-2721/62/20240442

power backup to the power grid during a predefined period and range of voltage drop when the grid junction voltage lowers to a certain level [5].

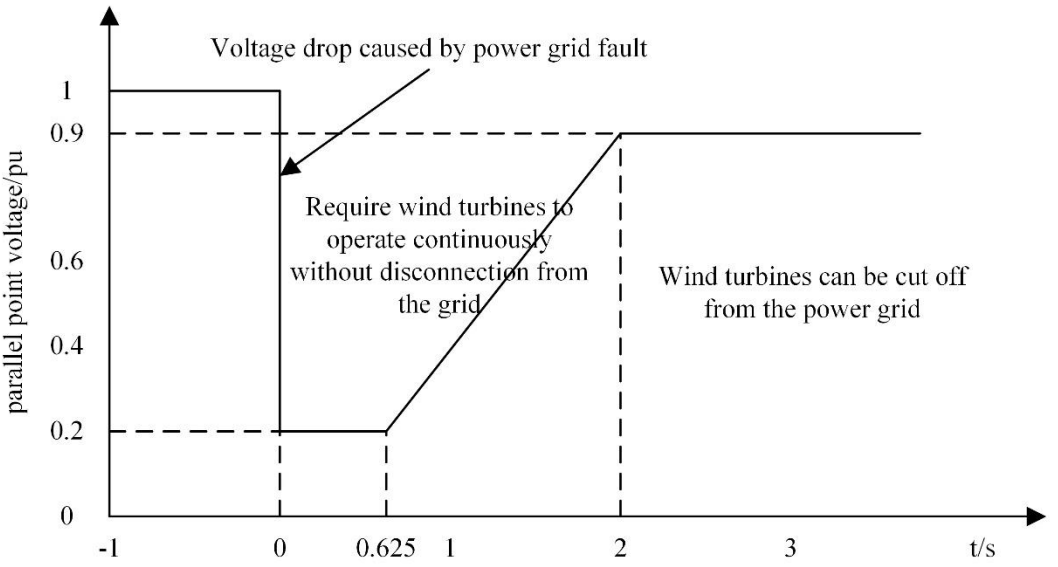

Figure 5. Basic requirements for low voltage ridethrough of wind turbines [5].

Figure 5 illustrates the fundamental requirements for voltage ride-through. The precise stipulations are as follows: if there is a system failure or disruption, and the voltage at the wind turbine generator system's grid connection point drops to 20% of its rated voltage, then the wind turbine generator system should be able to continually operate for 625ms without detaching from the grid. The wind turbine generator system can maintain ongoing operation without being disconnected from the power grid if the voltage at the grid connection point doesn't fall below 20% of the rated voltage. Moreover, within a timeframe of 2 seconds, the system is capable of restoring itself to 90% of the initial voltage level. The wind turbine generator system can operate reliably and efficiently in a variety of weather conditions and power grid environments due to this.

Installing longitudinal differential protection on the busbar of the double-fed wind turbine generator system to ensure that the fault can be instantly removed when the busbar fails. The three-stage current protection will function as secondary protection for the busbar, thanks to the implementation of longitudinal current differential protection. Since there is no current protection installed on the lower-level line, there is no need for the time-limited current quick-break protection to align with the lower-level line's quick-break protection. The quick-break protection's time constraint within the double-fed wind turbine generator system needs to align with the time constraint of the low-voltage ride-through to guarantee its low-voltage ride-through capability. This alignment will allow the wind turbine generator system to disconnect from the power grid and transition into emergency operation mode, ensuring the system's continued operation during a power outage or other unforeseen scenarios. However, it is important to note that the emergency operation mode should only be used as a last resort and should not be relied on for long periods of time, the protection should act [5]. In other words, according to the low-voltage ride-through curve, the degree of voltage drop and the non-disconnection operational time of the wind turbine generator system, influenced by its low-voltage ride-through capability, maintain a relationship as summarized in Table 1.

DOI: 10.54254/2755-2721/62/20240442

Table 1. Relationship between non-disconnection operational time and degree of voltage drop

Non-disconnection operational time	**Degree of voltage drop (U)**
0ms	$U<20\%U_N$
625ms	$U=20\%U_N$
(U+0.12)/0.5	$20\%U_N<U<90\%U_N$
∞	$U\leq20\%U_N$

6. Limitations of current protective measures and prospects for improvement measures

6.1. Limitations of grid connection protection measures for distributed photovoltaic power generation and doubly fed wind turbines

The integration of distributed power at a large scale and substantial proportion will significantly alter the topology, power flow, and fault characteristics of the distribution network. Regardless of the capacity and location of the accessed distributed power in the distribution network, and the subsequent islanding effect it might have on the network, no specific study or discussion has been conducted thus far. For the distribution network with distributed photovoltaic access, there are existing improved adaptive current fast-break protection schemes, but there is no improvement in time-limited current fast-break protection and definite-time overcurrent protection, and there is no consideration of combining it with other protection methods [1]. No additional evaluation has been conducted on how the control parameters of the converter affect the fault transient characteristics of double-fed wind turbines [5].

6.2. Outlook for improvement measures

Regarding the limitations of protective measures, simulation modeling can be used to obtain relevant parameters through the installation of detectors and other equipment. A simulation model can be established to study the impact of distributed power sources with different capacities and locations connected to the distribution network, as well as the resulting islanding effect on the distribution network.

7. Conclusion

This article primarily provides an overview of safeguarding measures for grid connection to distributed photovoltaic power generation and double-fed wind power generation. In relation to distributed photovoltaic power generation, the article consolidates solutions to issues inherent to distributed power generation, such as the tendency for excessive short-circuit current and reverse flow of such currents. It mainly introduces that the short-circuit current output by distributed power generation can be limited by the cooperation of fault current limiter and inverter. For double-fed wind power generation, this article summarizes the solutions to the impact of low voltage ride-through, non-power frequency characteristics, and weak feed characteristics. It mainly introduces the longitudinal differential protection for low voltage ride-through. To sum up, the technology for China's grid-connected photovoltaic power generation and double-fed wind power generation is still continuously evolving and being enhanced. Concurrently, the growth in their installed capacity is also keeping pace with the ongoing expansion in power generation scale. An in-depth examination, summarization and discussion on the influence of grid-connected photovoltaic power and double-fed wind power generation on relay protection, along with the assessment of improvement methods for relay protection and setting up the safety protocols for automatic devices, reveals that the existing protective measures are insufficient to cope with the growing complexity of grid-connected environments and long-term development requirements. Therefore, future research needs to explore new and more effective protection strategies and measures in depth. This encompasses employing progressive power electronic equipment, advancing control technology, and conducting research for more precise state estimation and protection mechanisms for wind and photovoltaic power generation units.

DOI: 10.54254/2755-2721/62/20240442

References

[1] Liang Huamin. Research on Fault Characteristics of Distribution Network Considering the Impact of Photovoltaic Connection Capacity [D]. *Nanjing University of Posts and Telecommunications*, 2022.

[2] Malone Research on the longitudinal protection of new energy generation grid connection lines [D]. *Xi'an University of Technology*,2023.

[3] Wu Zhengrong, Wang Gang, Li Haifeng, et al. Analysis of phase to phase short circuit faults in distributed power distribution networks [J]. *Journal of China Electrical Engineering*, 2013, 33(01):130-136.

[4] Kong Xiangping, Zhang Zhe, Yin Xianggen, et al. Research on Fault Current Characteristics and Fault Analysis Methods of Power Grid with Inverted Distributed Power Sources [J]. *Journal of China Electrical Engineering*, 2013,33(34):65-74+13.

[5] Shen Nanxuan Fault characteristics analysis and protection strategy research for grid connected operation of wind farms [D]. *North China Electric Power University*, 2018.

[6] Sadeghi H. A novel method for adaptive distance protection of transmission line connected to wind farms[J]. *International Journal of Electrical Power & Energy Systems*, 2012, 43(1):1376-1382.

[7] Pradhan A K, Joos G. Adaptive Distance Relay Setting for Lines Connecting Wind Farms[J]. *IEEE Transactions on Energy Conversion*, 2007, 22(1):206-213.

[8] Liu Scientific Research, Liu Yongmei, Sheng Wanxing, et al. Calculation Method for Maximum Admittance Capacity of Distributed Power Sources Connected to Distribution Networks Considering Voltage Constraints [J]. *Power Automation Equipment*,2016,36(06):81-87.

[9] Wang Chenqing, Song Guobing, Tang Haiyan, etc Adaptability analysis of distance protection in wind power access systems [J] *Power System Automation*, 2015(22):10-15.

[10] Nan Dongliang, Wang Weiqing, Peng Yinzhang, et al. Study on the optimal installation position and parameter configuration of fault current limiters in new energy grid connection [J]. *Journal of Solar Energy*, 2022,43(01):307-312.

[11] Tsimtsios A M, Safigianni A S, Nikolaidis V C. Generalized distance-based protection design for DG integrated MV radial distribution networks-Part Ⅰ: Guidelines[J]. *Electric power systems research*, 2019, 176(Nov.):105949.1-105949.16.