Proceedings of the 2nd International Conference on Mechatronics and Smart Systems
DOI: 10.54254/2755-2721/62/20240435

Improving turbulent corrosion in Francis turbine from aspects of fluid mechanics

Kezheng Zhu

Harbin NO.3 high school, Harbin, Heilongjiang, 150001

zhukezheng2006@163.com

Abstract. Turbulent corrosion within Francis turbines is a pressing concern in hydropower generation. This study investigates hydrodynamic factors contributing to this corrosion phenomenon and proposes strategies for mitigation, enhancing turbine performance and longevity. Employing Computational Fluid Dynamics (CFD) simulations, the study comprehensively analyzes the intricate water flow dynamics within the turbine, identifying areas susceptible to turbulence and guiding design adjustments. Turbulence reduction, achieved through optimizing blade and runner geometries, and the reduction of eddy currents through well-designed components, play pivotal roles in mitigating corrosion. Flow field analysis, turbulence reduction, and eddy current minimization emerge as central components in addressing turbulent corrosion. CFD simulations offer invaluable insights into flow dynamics, while optimized geometries reduce turbulence and associated corrosion risk. Acknowledging limitations, this research primarily addresses hydrodynamic aspects of turbulent corrosion, overlooking complex operational factors. Future research should encompass a holistic perspective by integrating additional variables for a more comprehensive understanding. In design and engineering, while optimizing blade profiles and flow path geometries is essential, exploring advanced materials, protective coatings, and innovative maintenance techniques is warranted. Interdisciplinary solutions should be sought to address multifaceted challenges presented by turbulent corrosion. Adopting a holistic approach and addressing these limitations promises to advance hydropower generation, ensuring safer and more efficient turbine operation.

Keywords: Turbulent corrosion, Francis turbines, Fluid dynamics analysis, Geometric optimization, Eddy current reduction

1. Introduction

Turbulent erosion is a complex phenomenon in which metal surfaces undergo damage due to the high-speed relative motion between the metal and corrosive fluid, primarily caused by the presence of solid particles suspended within the fluid. The introduction of solid-phase particles into the liquid flow results in what is known as liquid-solid two-phase flow erosion, a significant factor responsible for the extensive damage observed in various components of fluid systems, including pumps, valves, and pipelines, within industries such as petroleum, chemical processing, hydraulic power generation, mining, and metallurgy [1].

© 2024 The Authors. This is an open access article distributed under the terms of the Creative Commons Attribution License 4.0 (https://creativecommons.org/licenses/by/4.0/).

DOI: 10.54254/2755-2721/62/20240435

Turbulent erosion is a multifaceted process influenced by various factors, broadly categorized into three main aspects: materials, environmental conditions, and fluid mechanics [2]. Notably, the understanding of the impact patterns associated with fluid mechanics factors is still in its early stages. Consequently, predicting results in erosive wear experiments and comprehensively elucidating the underlying mechanisms face constraints and challenges, both in terms of interpretation and control. Fluid mechanics factors, particularly flow velocity, flow pattern, attack angle, and particle characteristics, such as type, hardness, concentration, size, distribution, shape, friability, density, and surface roughness, play critical roles in influencing erosive wear performance. Additionally, fluid properties such as viscosity and density are significant contributors to this process [3].

The Francis turbine is a vital component in the energy conversion process of hydroelectric power generation, although it is susceptible to erosion caused by suspended particles in the water flow. Over time, the collision of these particles with the turbine's surface results in abrasive wear, material loss, and surface deformation. Consequently, the efficiency of Francis turbines is reduced, necessitating frequent maintenance and repairs, ultimately impacting the overall electricity generation capacity [4]. This paper presents a review of the enhancement of turbulent corrosion in Francis turbines, encompassing aspects such as flow field analysis of hydrodynamics, turbulence reduction, and eddy current mitigation. This study is of academic importance as it provides valuable insights into the hydrodynamic aspects of turbulent corrosion in Francis turbines and offers effective mitigation strategies. It contributes to a deeper understanding of a critical issue in hydropower generation and highlights the importance of interdisciplinary research to improve turbine performance.

2. Mechanism of hydrodynamic influence on turbulent corrosion phenomenon in Francis turbine

The Francis turbine is an essential component in the energy conversion process of hydroelectric power generation, as shown in Figure 1. The understanding and mitigation of turbulent corrosion in Francis turbines heavily depend on hydrodynamic aspects [6]. This intricate process involves the interplay between fluid flow dynamics and material integrity, exerting a substantial influence on the turbine's overall performance and longevity. A key contributor to turbulent corrosion in Francis turbines arises from the generation of intense turbulence within the turbine, driven by the interaction between incoming water flow and the blade geometry and runner design, which if properly designed can reduce turbulent corrosion cases by approximately 10%-25% [7]. This forceful turbulence can lead to the removal and erosion of protective oxide layers on the material surfaces. Additionally, the presence of entrained particles and sediments in the water flow, such as sand, silt, or debris, exacerbates the corrosion process [8]. These particles, propelled by turbulence, effectively act as abrasive agents, accelerating material loss through mechanical wear and facilitating localized corrosion.

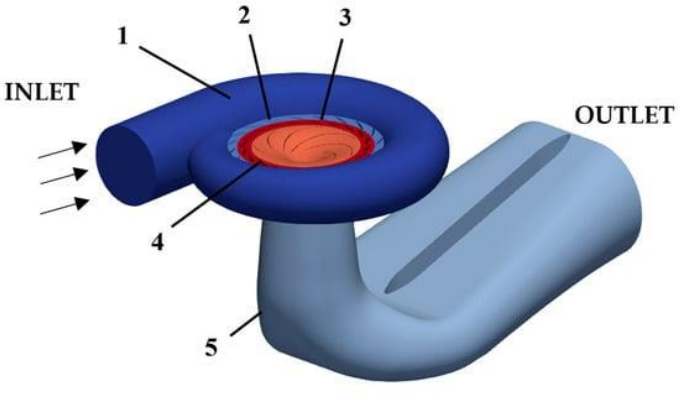

Figure 1. Turbine 3D model [5].

DOI: 10.54254/2755-2721/62/20240435

The hydrodynamic aspects, with a particular focus on flow field analysis, hold significant significance in comprehending the turbulent corrosion phenomenon [9]. Computational Fluid Dynamics (CFD) simulations offer valuable insights into the intricate flow patterns, velocity gradients, and turbulent eddies occurring within the turbine. Such analyses aid in pinpointing areas characterized by heightened turbulence and high-velocity impact, enabling targeted design adjustments aimed at reducing turbulence and enhancing material resistance. Techniques such as optimizing blade profiles and controlling flow path geometries can be employed to minimize turbulence generation, thereby mitigating turbulent corrosion. Furthermore, reducing vortices through design modifications helps diminish the impacts of turbulence on the material surfaces [10].

3. Flow field analysis of hydrodynamics

Flow field analysis plays a fundamental role in the mitigation of turbulent corrosion in Francis turbines [11]. Therefore, a rational design of a turbine using hydrodynamics may be able to extend its life by 3 to 5 years. A deep understanding of water flow dynamics within the turbine and its interaction with various components is essential for developing strategies to minimize turbulence, eddies, and drag, thus reducing the risk of turbulent corrosion. Computational Fluid Dynamics (CFD) simulations serve as a powerful tool for achieving this objective, offering a dynamic and detailed examination of flow patterns and hydrodynamic behavior within the turbine.

CFD simulations establish a computational framework for replicating and optimizing water movement through the Francis turbine [12]. This approach offers several advantages, such as the capability to visualize and quantify flow parameters like velocity, pressure, and turbulence within the turbine's flow path. By simulating fluid dynamics, it becomes feasible to pinpoint areas in the turbine where turbulence is more prominent and potentially damaging. These simulations help unravel the complex interplay between water and turbine components, including runner blades, guide vanes, a pipeline, and the surrounding casing.

The flow in a turbine's pipeline is characterized as laminar, transitional, or turbulent based on the Reynolds number (Re). The flow field in most of the mechanistic models is assumed as turbulent due to the high flow rate and length of the pipes used for transportation, resulting in a fully developed turbulent flow. This flow field is divided into three regions: the viscous sublayer, the buffer layer, and the turbulent layer, as shown in Figure 2 [12].

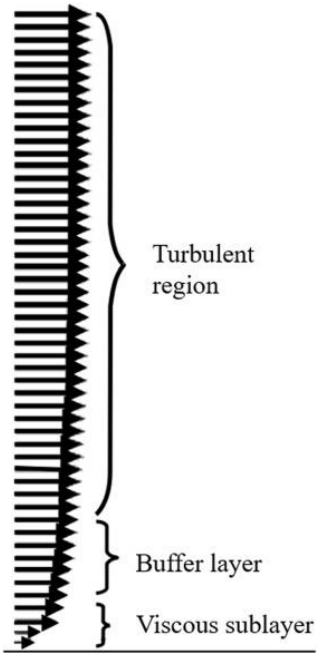

Figure 2. Turbulent boundary layer profile over a flat plate [12].

DOI: 10.54254/2755-2721/62/20240435

One primary goal of CFD simulations is to mitigate turbulence within the turbine, such as a pipeline. Turbulence in the flow increases the risk of material erosion and corrosion due to high-velocity impacts and fluctuating pressure on the turbine surfaces [13]. Insights gained from CFD simulations enable engineers and researchers to take targeted actions, potentially modifying the turbine design and optimizing the flow path geometry. This may involve adjustments to blade profiles and guide vane angles to promote smoother water flow and minimize turbulence generation. Reducing turbulence not only extends the turbine's operational life but also enhances its efficiency.

In addition to addressing turbulence, CFD simulations can assist in controlling eddies within the turbine [14]. Eddies, characterized by swirling vortex-like flow patterns, can intensify turbulent conditions and elevate the risk of corrosion. An understanding of eddy origins and behavior allows for design modifications to minimize their occurrence. Altering the geometrical features of the turbine's internal components can substantially reduce eddy formation and subsequent turbulence.

Moreover, CFD simulations can be utilized to optimize the turbine's hydraulic efficiency [15], indirectly contributing to turbulence reduction. Improving flow dynamics within the turbine can decrease drag, enhancing both the turbine's energy conversion capabilities and the mechanical stress on its components. Reduced drag results in fewer turbulent impacts on material surfaces, ultimately lowering the risk of corrosion.

Employing CFD simulations in flow field analysis is a crucial step in addressing turbulent corrosion in Francis turbines through hydrodynamic aspects. These simulations provide a comprehensive understanding of flow patterns, turbulence, and eddy formation, enabling precise design modifications to reduce turbulence and enhance the turbine's overall performance and material integrity. According to statistics, as of the first three quarters of 2022, China's hydraulic turbine export volume was 9,570 units, and the export value was USD 0.56 billion, according to experts' estimation, there is still a vast export market for the hydraulic turbine market. At present, the efficiency of most hydraulic turbines is maintained at around 90 percent, and although the existing base can meet the needs of hydropower plants, the hydraulic turbine manufacturing industry still needs technological improvements, which will not only improve the conversion efficiency of hydraulic turbines but also prolong their lifespan and expand their sales [16].

4. Turbulence reduction

Turbulence reduction in Francis turbines represents a pivotal facet of addressing the turbulent corrosion phenomenon, as it directly targets the generation of turbulent flow within the turbine [17]. The design of blade and runner geometry plays a crucial role in achieving this reduction by controlling and minimizing turbulence. Smooth curves and optimal blade profiles are pivotal elements in this effort, as they contribute to a more streamlined and efficient flow within the turbine. In the research conducted by Goyal and colleagues [18], a numerical simulation was employed to visualize the helical structure of the vortex rope in a Francis-99 test scenario. This visualization was achieved by generating an iso-surface representing constant pressure at 99.5 kPa, as illustrated in Figure 3, a successful case of turbulence reduction.

DOI: 10.54254/2755-2721/62/20240435



Figure 3. Numerically obtained iso-surface of constant pressure at 99.5kPa [19].

Smooth curves, in the context of Francis turbine design, refer to the gradual and streamlined transitions within the turbine's internal components, including the blade and runner geometries. These smooth transitions facilitate the flow of water, preventing sudden changes in direction and minimizing disturbances in the flow. Sudden changes in flow direction or abrupt geometry shifts can lead to the generation of turbulence, as the water flow attempts to adjust to these changes. By designing components with smooth curves and continuous transitions, the flow of water is directed more efficiently, thus reducing the likelihood of turbulence development [20].

Proper blade profiles are equally vital in turbulence reduction. Blade profiles are carefully designed to optimize the interaction between the water and the turbine blades [21]. The selection of the correct blade profile can minimize disturbances in the flow and reduce turbulence generation. Blades with appropriate profiles are designed to ensure that water flows smoothly over and around them, reducing the risk of eddy formation and turbulence. Blade profiles that promote laminar flow and minimize separation of the boundary layer can contribute to a more uniform flow, thereby diminishing turbulence.

Furthermore, a well-designed runner geometry is instrumental in minimizing turbulence. The runner is a key component of the turbine, and its shape and dimensions significantly influence the flow dynamics. Proper runner geometry encourages a more balanced and controlled flow pattern, avoiding excessive turbulence and eddy formation [22].

The reduction of turbulence through blade and runner design modifications not only enhances the overall performance and efficiency of the Francis turbine but also extends the operational lifespan of the equipment. By mitigating turbulence generation, the risk of turbulent corrosion is substantially reduced. Additionally, smoother and more efficient flow patterns have a positive impact on the turbine's energy conversion capabilities, minimizing mechanical stress on the turbine components.

Turbulence reduction through the optimization of blade and runner geometry is a vital approach to addressing turbulent corrosion in Francis turbines. By emphasizing the importance of smooth curves, proper blade profiles, and optimized runner design, engineers and researchers can significantly decrease the generation of turbulence, subsequently enhancing the turbine's performance, minimizing the risk of turbulent corrosion, and contributing to the long-term reliability of hydropower generation.

5. Reducing eddy currents

Mitigating the turbulent corrosion phenomenon in Francis turbines requires a critical focus on reducing eddy currents. Eddy currents, characterized by vortex-like flow patterns, significantly exacerbate turbulence and contribute to the risk of corrosion [23]. Typically induced by abrupt changes in flow direction or turbulence-generating structures within the turbine, these currents can be effectively addressed through meticulous design considerations for turbine blades and flow paths.

Central to the effort in achieving turbulence reduction is the design of turbine blades and flow paths that minimize the generation and retention of eddy currents. Eddy currents primarily originate in

DOI: 10.54254/2755-2721/62/20240435

regions of the turbine where the flow path encounters disruptions, geometrical variations, or sharp turns[24]. These disturbances lead to the formation of swirls and vortices, intensifying turbulence, enhancing the impact of water on turbine surfaces, and increasing the likelihood of corrosion.

Optimizing blade design stands out as a crucial step in this endeavor. The selection of blade profiles should prioritize ensuring that water flows over and around the blades smoothly and uninterruptedly. Streamlined blade designs reduce the creation of localized disturbances in the flow. This controlled and linear guidance of the water flow significantly reduces the risk of eddy current formation. Proper blade design also serves to minimize flow separation and the development of recirculation zones, both of which contribute to eddy currents and turbulent corrosion[25].

Moreover, the design of flow paths and the internal geometry of the turbine play an essential role in curbing eddy currents [26]. Maintaining a configuration that is free of abrupt shape changes or obstructions within turbine components like the casing and runner is paramount. Flow path geometries should be meticulously optimized to encourage smooth, uninterrupted flow patterns. Modifications to the geometry direct the flow in a manner that minimizes the generation and retention of eddies, thereby enhancing the overall efficiency of the turbine and reducing the risk of turbulent corrosion. Figure 4 showcases a section of a cross-flow turbine, where the nozzle design, along with the associated gate for discharge control, is attributed to Miroslav Cink [27].

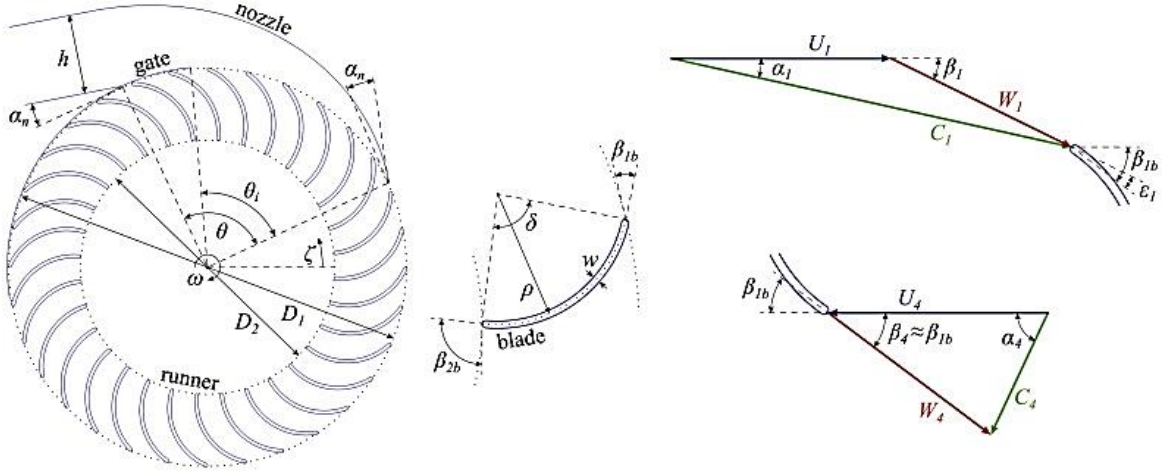

Figure 4. Cross-flow turbine nomenclature and velocity triangles [26].

The reduction of eddy currents not only mitigates the risk of turbulent corrosion but also augments the overall performance of the Francis turbine [28]. This reduction contributes to a more uniform and consistent flow pattern within the turbine, reducing the impact of high-velocity water on turbine surfaces. Consequently, it results in decreased mechanical stress and abrasion, ultimately promoting the long-term integrity and reliability of the equipment.

The strategic reduction of eddy currents, achieved through the meticulous design of turbine blades and flow paths, is a pivotal aspect in addressing the turbulent corrosion phenomenon in Francis turbines [29]. This approach minimizes eddy generation and retention, effectively reducing turbulence, enhancing turbine performance, and, crucially, diminishing the risk of turbulent corrosion. These efforts contribute to the sustainability and reliability of hydropower generation.

6. Conclusion

In conclusion, this research paper has provided a thorough exploration of the critical issue of turbulent corrosion in Francis turbines, with a primary emphasis on the hydrodynamic aspects that influence this phenomenon. The study's overarching objective was to elucidate the mechanisms underlying turbulent corrosion and propose effective strategies to mitigate its adverse effects, ultimately bolstering the performance and lifespan of these integral components in hydropower generation.

DOI: 10.54254/2755-2721/62/20240435

The research highlighted the paramount importance of several key strategies, namely flow field analysis, turbulence reduction, and the minimization of eddy currents, in the battle against turbulent corrosion. Flow field analysis, executed through Computational Fluid Dynamics (CFD) simulations, unraveled the intricate dynamics of water flow within the turbine, offering critical insights for pinpointing areas susceptible to turbulence and guiding targeted design modifications.

Turbulence reduction, achieved through the optimization of blade and runner geometries, emerged as a fundamental approach for reducing turbulence and mitigating the risk of turbulent corrosion. Similarly, the minimization of eddy currents, facilitated by well-designed turbine blades and flow paths, proved to be a pivotal strategy for turbulence reduction and corrosion prevention.

However, it is important to acknowledge that the research possesses certain limitations. The study primarily concentrated on the hydrodynamic aspects of turbulent corrosion, while the actual operational environment of Francis turbines encompasses a range of complex factors, including water quality, temperature variations, and diverse operational conditions. Future research initiatives should strive for a more comprehensive approach that integrates these additional factors, contributing to a more holistic understanding of the issue.

Furthermore, although CFD simulations provide valuable insights into flow dynamics, they remain inherently theoretical. To enhance the reliability and practical applicability of the findings, empirical validation against real-world data is imperative. Integrating experimental validation and in situ measurements would help bridge the divide between theoretical simulations and actual turbine operation.

In the realm of design and engineering, while optimizing blade profiles and flow path geometries is a crucial aspect of turbulence reduction, there exist promising avenues for further improvement and exploration. These include the investigation of advanced materials, protective coatings, and innovative maintenance techniques that can bolster material resistance to turbulent corrosion.

Looking forward, the pursuit of enhanced turbine efficiency, reduced maintenance requirements, and prolonged operational lifespan represents a perpetual challenge. Future research endeavors should be geared toward interdisciplinary solutions that comprehensively address the multifaceted challenges posed by turbulent corrosion, ensuring the long-term sustainability and reliability of Francis turbines in the field of hydropower generation. By addressing these limitations and adopting a holistic approach, the field can make significant strides toward safer and more efficient hydropower generation.

References

[1] Molina, N., Walczak, M., & Michalczewski, R. (2020). Erosion under turbulent slurry flow: An experimental determination of particle impact angle, impact direction, and distribution thereof by Image Processing. Wear, 454–455, 203302. https://doi.org/10.1016/j.wear.2020.203302

[2] Davies, R. W. (1952). Turbulent diffusion and erosion. Journal of Applied Physics, 23(9), 941–948. https://doi.org/10.1063/1.1702355

[3] AL-Dogail, A. S., & Gajbhiye, R. N. (2021). Effects of density, viscosity, and surface tension on flow regimes and pressure drop of two-phase flow in horizontal pipes. Journal of Petroleum Science and Engineering, 205, 108719. https://doi.org/10.1016/j.petrol.2021.108719

[4] Thapa, B. S., Dahlhaug, O. G., & Thapa, B. (2015). Sediment erosion in hydro turbines and its effect on the flow around guide vanes of Francis Turbine. Renewable and Sustainable Energy Reviews, 49, 1100–1113. https://doi.org/10.1016/j.rser.2015.04.178

[5] Wang, H., Zhou, D., Guo, J., & Xu, L. (2023, October 16). Analysis of hydraulic losses in vortex rope inside the draft tube of Francis pump turbine based on entropy production theory. MDPI. https://doi.org/10.3390/machines11100965

[6] Lyu, Y. (2019). The effect mechanism of hydrodynamic factors on naphthenic acid flow-induced corrosion. Volume 4: Fluid-Structure Interaction. https://doi.org/10.1115/pvp2019-93426
[7] Trivedi, C., & Cervantes, M. J. (2017). Fluid-structure interactions in Francis Turbines: A perspective review. Renewable and Sustainable Energy Reviews, 68, 87–101. https://doi.org/10.1016/j.rser.2016.09.121
[8] Pähtz, T., Clark, A. H., Valyrakis, M., & Durán, O. (2020). The physics of sediment transport initiation, cessation, and entrainment across Aeolian and fluvial environments. Reviews of Geophysics, 58(1). https://doi.org/10.1029/2019rg000679
[9] Vaidya, A. (2020). Teaching and learning of Fluid Mechanics. MDPI.
[10] Wang, M., Li, Y., Yuan, J., & Yuan, S. (2021). Effects of different vortex designs on optimization results of mixed-flow pump. Engineering Applications of Computational Fluid Mechanics, 16(1), 36–57. https://doi.org/10.1080/19942060.2021.2006091
[11] Leer, M., & Kempf, A. (2020). Fast flow field estimation for various applications with a universally applicable machine learning concept. Flow, Turbulence and Combustion, 107(1), 175–200. https://doi.org/10.1007/s10494-020-00234-x
[12] Thorat, U., Jones, M., Woollam, R., Owen, J., Barker, R., Thompson, H., & de Boer, G. (2023). Computational Fluid Dynamics driven mass transfer model for the prediction of corrosion in pipelines. Journal of Pipeline Science and Engineering, 100148. https://doi.org/10.1016/j.jpse.2023.100148
[13] Kain, V. (2014). Flow accelerated corrosion: Forms, mechanisms, and case studies. Procedia Engineering, 86, 576–588. https://doi.org/10.1016/j.proeng.2014.11.083
[14] Tiwari, G., Kumar, J., Prasad, V., & Patel, V. K. (2020). Utility of CFD in the design and performance analysis of hydraulic turbines — A Review. Energy Reports, 6, 2410–2429. https://doi.org/10.1016/j.egyr.2020.09.004
[15] Abeykoon, C. (2022). Modeling and optimization of a Kaplan Turbine — a comprehensive theoretical and CFD Study. Cleaner Energy Systems, 3, 100017. https://doi.org/10.1016/j.cles.2022.100017
[16] Ji, Y., Song, H., Xue, Z., Li, Z., Tong, M., & Li, H. (2023b). A review of the efficiency improvement of hydraulic turbines in Energy Recovery. Processes, 11(6), 1815. https://doi.org/10.3390/pr11061815
[17] Salehi, S., & Nilsson, H. (2022). Flow-induced pulsations in Francis turbines during startup - a consequence of an intermittent energy system. Renewable Energy, 188, 1166–1183. https://doi.org/10.1016/j.renene.2022.01.111
[18] R. Goyal, C. Trivedi, B.K. Gandhi, M. Cervantes, O.G. Dahlhaung. Numerical simulation and validation of a high head model Francis turbine at part load operating condition. Inst. Eng. India (2017), 10.1007/s40032-017-380-z
[19] Goyal, R., & Gandhi, B. K. (2018). Review of hydrodynamics instabilities in Francis turbine during off-design and transient operations. Renewable Energy, 116, 697–709. https://doi.org/10.1016/j.renene.2017.10.012
[20] Hirano, M., Watanabe, Y., & Ishikawa, M. (2017). The rapid blending of closed curves based on curvature flow. Computer Aided Geometric Design, 52–53, 217–230. https://doi.org/10.1016/j.cagd.2017.03.005
[21] Du, Q., Li, Y., Yang, L., Liu, T., Zhang, D., & Xie, Y. (2022). Performance prediction and design optimization of Turbine Blade profile with Deep Learning Method. Energy, 254, 124351. https://doi.org/10.1016/j.energy.2022.124351
[22] Chen, J., Zheng, Y., Zhang, L., He, G., Zou, Y., & Xiao, Z. (2022). Optimization of geometric parameters of hydraulic turbine runner in turbine mode based on the orthogonal Test Method and CFD. Energy Reports, 8, 14476–14487. https://doi.org/10.1016/j.egyr.2022.10.444

DOI: 10.54254/2755-2721/62/20240435

[23] Yang, P., Chen, S., Li, W., & Zeng, C. (2022). Large-eddy simulation of the boundary layer development in a low-pressure turbine cascade with passive flow control. Frontiers in Energy Research, 10. https://doi.org/10.3389/fenrg.2022.853166

[24] Wu, C., Zhang, W., Wu, P., Yi, J., Ye, H., Huang, B., & Wu, D. (2021). Effects of blade pressure side modification on unsteady pressure pulsation and flow structures in a centrifugal pump. Journal of Fluids Engineering, 143(11). https://doi.org/10.1115/1.4051404

[25] Pu, K., Huang, B., Miao, H., Shi, P., & Wu, D. (2022). Quantitative analysis of energy loss and vibration performance in a circulating axial pump. Energy, 243, 122753. https://doi.org/10.1016/j.energy.2021.122753

[26] Leguizamón, S., & Avellan, F. (2020). Computational parametric analysis of the design of cross-flow turbines under constraints. Renewable Energy, 159, 300–311. https://doi.org/10.1016/j.renene.2020.03.187

[27] M. Sinagra, V. Sammartano, C. Aricò, A. Collura, T. Tucciarelli Cross-flow turbine design for variable operating conditions Procedia Eng., 70 (2014), pp. 1539-1548, 10.1016/j.proeng.2014.02.170

[28] Kriezis, E. E., Tsiboukis, T. D., Panas, S. M., & Tegopoulos, J. A. (1992). Eddy currents: Theory and applications. Proceedings of the IEEE, 80(10), 1559–1589. https://doi.org/10.1109/5.168666

[29] Wang, W., Zhang, L., Yan, Y., & Guo, Y. (2007). Large-eddy simulation of turbulent flow considering inflow wakes in a Francis Turbine blade passage. Journal of Hydrodynamics, 19(2), 201–209. https://doi.org/10.1016/s1001-6058(07)60049-3