Proceedings of the 4th International Conference on Signal Processing and Machine Learning
DOI: 10.54254/2755-2721/45/20241454

An energy-based model of soft robot grippers realizing design and prediction of multistable configuration under open loop control

Kaisheng Zhang

Shanghai University, 99 Shangda Road BaoShan District Shanghai, 200444, P. R. China

zkscddxm@shu.edu.cn

Abstract. Soft robotics and soft robots are gaining popularity these days due to their advantage like adaptability. Multistable structure, a special structure that can stay stable under more than one state, provides people with the capacity of the researching open-loop control method in the domain of robotics. Thus, the characteristics of multistable structure can benefit the design and simplify the control of robots. This article introduces an energy-based analytical model for soft multistable grippers. It can design the configuration of the gripper, predict its stable states and set the force of grasping action and this model can save much time spent on calculation comparing to traditional method of Finite Element (FE) simulations under a sufficiently low error rate. The idea of topology, certain algorithms and simulations are applied and experiments are also conducted later to certify the feasibility and accuracy of this model. This elaborate model is a new inspiration for soft robotics.

Keywords: Soft robotics, Grippers, Multistbale structure, Finite element analysis, Open loop control.

1. Introduction

In recent years, soft robots are gaining more and more attention from the publics and they have greatly evolved with the help of emerged materials of high technical level and bio-inspired technology. Since the concept of soft robotics was carried out by elite scholars, various of models of soft robotics and inferior units aiming at accomplish diversified tasks and missions such as a actuator inspired by the muscle tissue of earth-worms that realizes in-pipe movement of robots [1], legged soft robots inspired by quadruped that can move at high speed [2], a bionic robots that apes the kinematic pattern of crabs have emerged gradually [3]. Thanks to the characteristics of ductility, flexibility and plasticity when comparing to traditional robots consist of rigid materials like iron or carbon fiber and solid joints, soft robots have been implemented in different application scenarios like dual-action in virtue reality [4], medical rehabilitation, production of wearable devices and the designing of diverse bio-inspired robots [5].

In order to realize ideal and reasonable functions, soft robots require certain design of customized materials and specialized structures and among these, a reliable gripper plays an important role in the operation of soft robots under most circumstances. Most of rigid robots move by wheels or tracks and

© 2024 The Authors. This is an open access article distributed under the terms of the Creative Commons Attribution License 4.0 (https://creativecommons.org/licenses/by/4.0/).

DOI: 10.54254/2755-2721/45/20241454

catch things with clamps. That may cause certain lack of capability in special situation like complex and unfriendly environment or picking up and holding tender objects [6,7]. Advanced grippers can make up these drawbacks of traditional robots.

A gripper of eligible performance ought to be able to match arms of a robot, grasp and hold objects enough tightly and accomplish allocated carrying work [8]. Decades before, the grasping function are realized by fundamental design like rubber air bag, electroactive polymers, tendons, Magnetorheological fluid [8,9,10]. In recent decades, scientists have managed to achieve great progress in this domain. Various grasping methods appear. Activated by heat and temperature, navigated by light beam [11], drove by compressed fluids [12], grasp can be realized in different ways. Advanced structures are also born in laboratories from time to time, Xing Wang and his research team have created a gripper with four tapered soft fingers and one multi-mode suction cup to augment the productivity of fruit collecting in agriculture field by increasing the grasping force during harvest [13]. The range of its application and its reliability have also been greatly improved [14]. But there still exists a load of technical blanks remains to be erased. The infinite dimensionality, material non-linearity, and large deformations of the majority of soft robots continue to be obstacles bothering further research and development. Most of the grippers are controlled by a close-loop system which means data and parameter of the current situation should be collected in time and be treated as a kind of feedback to the controlling system and algorithms. The processing unit of the robot need these data to make the global configuration under control and it takes a lot of energy and time collect data from time to time as it requires a number of high-level sensors. Previous designing work, data collecting during the operation and later maintaining and repairing are all be complicated exponentially. In this situation, the need of algorithms accompanied with a series of customized sensors is increasing gradually to resolve related dilemmas. Fortunately, multistable structures can be one of the resolutions.

Multistable structure refers to a system that shifts between two or more stable states constantly. Due to its non-linear characteristic, a multistable structure can search and stay at a single stable state without any external interference. It has certain significance in engineering because of its spontaneous accuracy and capacity of searching how the minimum of energy cost can be exhibited. A number of classical bistable and multistable substructures will easily results in an ideal structure [15]. To list a few, latch-lock mechanisms, double slider mechanisms, buckling mechanisms [16], complaint mechanisms, constrained trusses and constrained dielectric elastomers [15]. By making good use of them, the design of soft robots can be greatly simplified as engineers are no longer constrained to take closed-loop control of every single unit and bit within the whole system [15]. But correspondingly, engineers are required to produce elaborate configurations as there is no feedback within the whole grasp process if they choose to employ a multistable structure and open-loop system. Instead, engineers need to draw the plot of different forms of energy flows detected in laboratories when they strive to reach the best form of the gripper design. These precious plots will provide scholars with certain desired points of those extremums where the minimum of energy flow can be found. These inflection points on the curve means the structure reaches a stable state. The plot of energy is called the energy landscape. Additionally, engineers will also need create a decent model of multiple collaborating multistable units and employ conventional finite element packages to release the full potential abilities of multistable soft robot grippers.

This work aims at produce an attractive model of soft robot gripper. This model is based on energy and it can offer people with the multiple functions. First, it is a tool of designing an energy-efficient soft robot gripper as open-loop control can be realized and employed in this model. Much fewer error will emerge. Topology and geometrical parameters are applied. Second, the prediction of the fundamental information such as configuration, stiffness, shape and size of a couple of desired multistable soft robot grippers are now possible. An energy landscape will be illustrated with the help of this model and a 2D lattice approximation and algorithms of searching the minimum of energy will function. Third, the control of grippers will be far easy and direct due to the open-loop system. No data collecting unit is needed as the device require no feedback to navigate its working units. Ultimately and frankly, the design of the grippers can be far more precise and efficiency, the gripper itself will also be more durable

DOI: 10.54254/2755-2721/45/20241454

and adaptive. The Dome Phalanx Gripper (DPG) is a couple of soft robot grippers and it be mentioned for many times in this work [15].

2. Methods

To reach the goal, this work will divide the applied method into two essential steps: the design of the model and the prediction of the ideal configuration of stable states with the help of the model.

2.1. Design of the mode

The main part of the model is two equal pneumatic actuators with sequential bistable units and both of them constitute the gripper model.

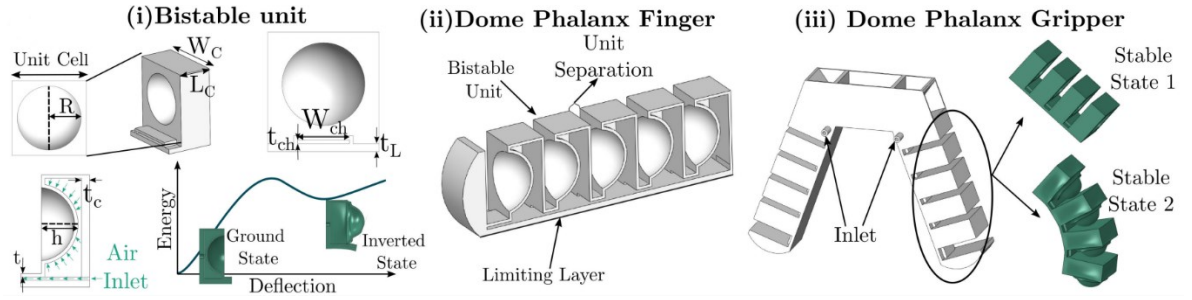

Figure 1. Configurations of the model [15].

Its shape is quite similar to crab claw or two fingers but they are symmetrical (Fig. 1(iii)). One half claw is made up of several adjacent lattices, or cells, in this model, which is the separation unit, and they are connected and restrained by the limiting layer on one side (Fig. 1(ii)).

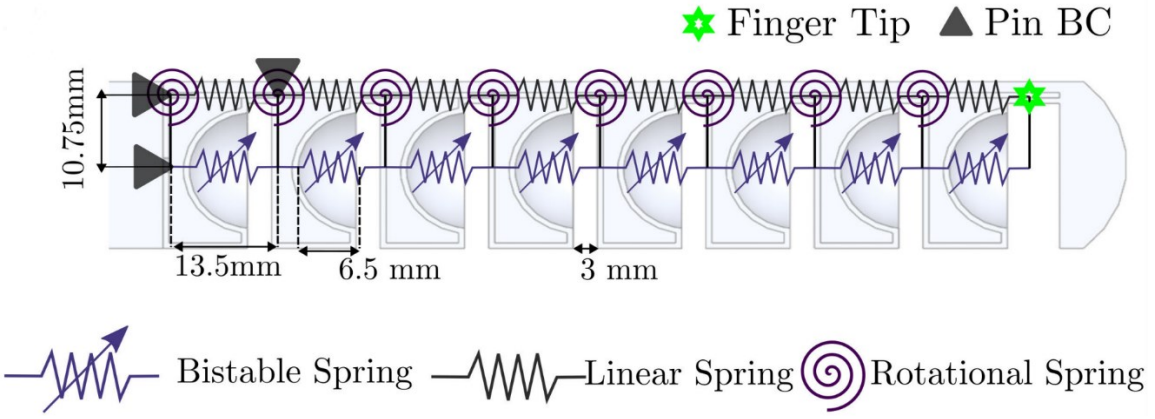

Figure 2. Three types of springs set in the lattices [15].

Three springs of different functions are attributed to each lattice and are placed accordingly. Bistable springs, linear springs and torsional springs (Fig. 2). Inside every single lattice a pneumatic dome and bistable spring is capsulated. The bistable springs in the middle part of the lattices is connected with the tips of the domes. The extension routes of the springs thus match the movement of the dome tips. By doing this, the global deformation can be supervised as it can be inferred with the help of the states of each bistable spring. The linear springs are placed inside the limiting layer in a straight line and the torsional springs are placed in the connecting part of two adjacent lattices.

DOI: 10.54254/2755-2721/45/20241454

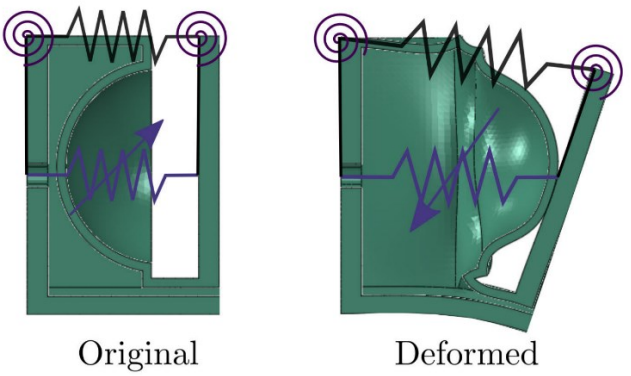

Figure 3. Default state and inverted state of the dome [15].

Every dome can reach a stable state when it is in the default states, which is concave, or totally actuated by positive air pressure, which inverts the dome to the external space of the lattice units. The default states can be restored by applying negative air pressure, which is simple but effective. When the dome is inverted, it will bulge and touch the next lattice to transmit stress (Fig. 3). Every dome in every unit is programmable as they are all crucial individuals for the sum of the deformation quantity of the gripper. Some param eters will affect the passing of stress. Dome height (h) and chamber thickness (t_c) are two influencers that should be dealt with properly. The limiting layer will reduce the deformation of one side of the half claw to realize the phenomenon of bending. The angular displacement of the torsional springs is described by the angle θ .The limiting layer should be thick and tough enough as it will be considered as a rigid part in order that the axial deformation of the limiting layer can be neglected. So, under this circumstance, two vital but fundamental states of global stability of the half claw are realized: the default state and the bending state. The claw will reach a target shape of certain curvature to realize the action of catching and then carrying with the cooperation of two half claws. The shift of two states will both be under open-loop control as no constant pressure is demanded to maintain the states of the units. The ultimate curvature can be modified by a load of parameters such as the height of the dome (h) , the size of the unit (UC) , the strain limiting thickness (t_L) air chamber dimensions(W_c, L_c) and the length of intervals between two adjacent cells $(unit\ separation)$ [15]. In this model, mentioned parameters are set like this: h=6.5mm, 7=0.75mm, R=16mm, UC=22mm, WC=20mm, LC=9mm, W_{ch}=10mm, t_{ch}=0.75mm, t_L=1.5mm, unitseparation=3mm (see Fig. 1(i) for reference). The equation of energy of linear, bistable, torsional springs inside every lattice in this model and the total energy can be generalized like this:

$$E_L = \frac{1}{2} k_l \times x^2 \tag{1}$$

$$E_{NL} = \frac{1}{2} k_b \times x^2 \left(1 + \left((1-\alpha)\left(\left(\frac{x}{d}\right)^2 - 2\frac{x}{d}6\right)\right)\right) \tag{2}$$

$$E_T = \frac{1}{2} k_\theta \times \theta^2 \tag{3}$$

$$E_{tot} = \sum_{i=1}^{n} E_L + E_{NL} + E_T \tag{4}$$

$k_l, k_b, k_\theta, \alpha$ are all constants used in the formula of spring energy [15]. They can all be calculated by keeping testing different deflection, reaction forces and moments applied on the topology structure until ideal figures are obtained. n inside the fourth equation represents the number of units, which is the segments on the finger, or half claw [15]. The state of a random determined lattice follows 2^n [15]. With all the conclusion above, the equation and formula are inferred and the calculation are available

DOI: 10.54254/2755-2721/45/20241454

via certain mathematical methods. Data and parameters of every single lattice is accessible. The whole deformation and stiffness of the finger is decided by every separate state of unit. The plot of the energy of the whole device is reachable. The bistable states are searchable. The logical chain is now completed, which means that the whole configuration and action of the gripper is predictable and attainable by getting rid of the characteristic of infinite-dimensional deformation and can be controlled by open-loop input globally.

2.2. Prediction of the structure

The predictability can contribute the design and further understanding of soft robot grippers as people are now able to know what the shape and kinematic states the DPG in this work will be through the method of programming. The energy plot is named energy landscape. We can efficiently design a group of DPG for a determined target or function can judge its feasibility by simply produce a functional image of the energy landscape. The minimum of the energy can be directly obtained on the graphic and barely no errors will occur. The bistability improves the retention of the gesture of the gripper without deliberate external artificial intervention. The parameter fitting is fulfilled with the help of Newton-Raphson (NR) algorithm, FE Analysis and curve fitting.

Tentative experiments should also be arranged to verify the reliability of this model. Different materials, numbers of lattices, performances of each kind of springs should be tested one by one to certificate the ability of prediction of this model. Control variable method is also required to test and judge the interval of simulated result and real production, which represented the designing ability of this model. Maintain those geometrical variables of the gripper and then test how accurate every segment of the finger can reach the same place by shifting domes between activated and default states again and again and this can tell whether the design is stable and reliable.

In order to conduct a decent experiment, model validation is demanded. Parameter fitting is required firstly as some constants used in the spring energy formula like k_b, k_θ and α should be obtained. It can be realized with the help of FE simulations and simulating the appropriate defection, reaction forces and moments applied of the topology. Under certain extension length between bistable states (d) and the ramping pressure load of the inner surface of the dome, the strain energy augments during the inversion and it represents the assumption of the energy stored in the bistable structure.

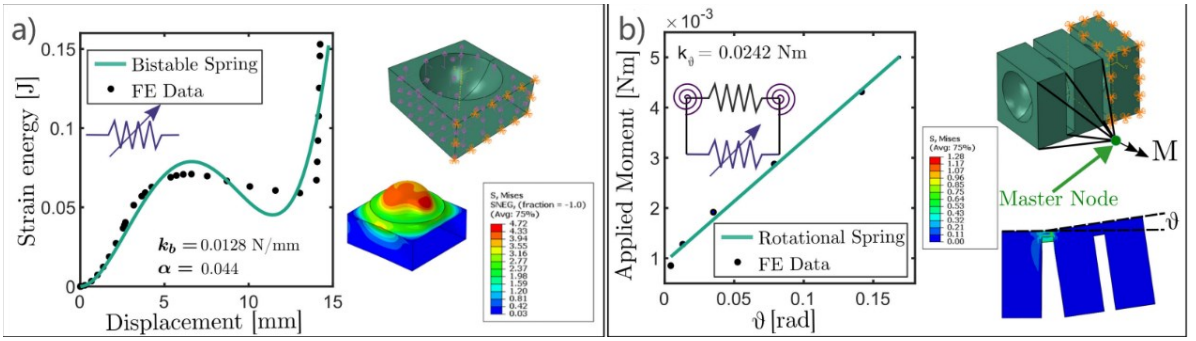

Figure 4. Parameter tuning for bistable springs and rotational springs based on FE simulations [15].

By considering the proper quantity of d and pressure we can get k_b and α by applying the least squares curve fitting technique (Fig. 4a). And k_θ can be accessed by applying moments of certain amplitude to the two segments at the end of a DPG consists of three domes (Fig. 4b). The rotational angle θ can be calculated by detecting the states of the limiting layer. The linear relationship between θ and the moment applied can justify the linear action of the torsional spring and thus get the access of the most appropriate k_θ. The simulation is also capable of deciding the selecting of material by judging its modulus via implementing gradual relaxing step after the domes are inverted. After obtaining all the constants required for the prediction of the structure are obtained during the parameters fitting, the ultimate model

DOI: 10.54254/2755-2721/45/20241454

is capable of the prediction. As mentioned before in this article, the dome states follow 2^n with the n represents the number of the segments. Related plot of energy and functions can be illustrated.

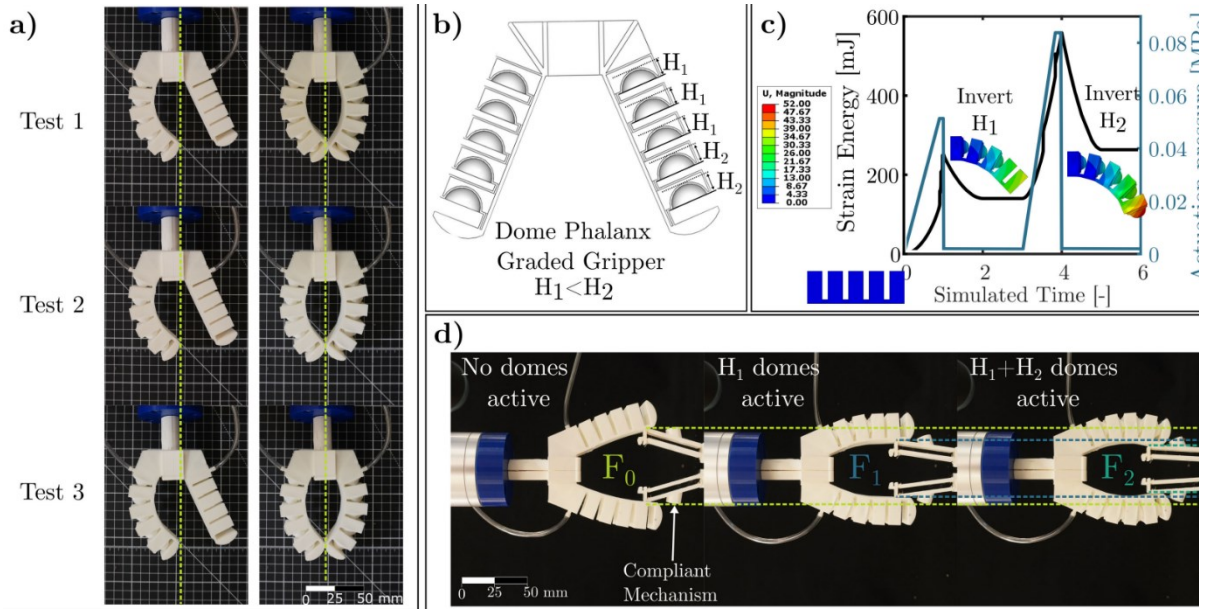

Figure 5. DPG performance tests [15].

The proper function of the model is validated by the FE simulation. For purpose of guarantee, the model should be certified available and reliable. Solid 3D sample of the grippers will be produced by 3D printing to validate the accuracy and the feasibility of the prediction function of the model. Several test should be taken. Soft gripper position control test: the position of the solid gripper matches the one predicted by the model (Fig. 5a). Graded dome of different height pressure will allow accessible stable states realized by applying different quantities of pressure (Fig. 5b). Related energy minimum of the stable states should be plotted (Fig. 5c). Different numbers of domes and segments should be tested to realized different force of the grasping action (Fig. 5d). All FE simulations will be accomplished by commercial software ABAQUS.

3. Results

The sample is printed using the FDM printing technique on an Ultimaker 3d Printer. The main material of the gripper is thermoplastic polyurethane (TPU)95A and its modulus $E = 29\ MPa$ .The layer height is slightly reduced in order to avoid air leaking. The constants obtained after the parameter fitting are listed below: the segment height and length:10.75mm,13.5mm, extension length between bistable states $d = 3.5\ mm$, ramping pressure load of the inner surface of the dome $\in (0,0.15)\ MPa$, moments of certain amplitude applied to the three-dome gripper:0.005 Nm. Ideal constants in the spring formula are thus obtained: $k_b = 12.84 N/mm$, $\alpha = 0.043$, $k_\theta = 0.0242\ Nm/rad$.

Two phalanx fingers are adopted to comprise the gripper and certify the function of the model. Each finger consists of 5 segments. After the inversion, all segments works properly and the action of catch is realized appropriately.

DOI: 10.54254/2755-2721/45/20241454

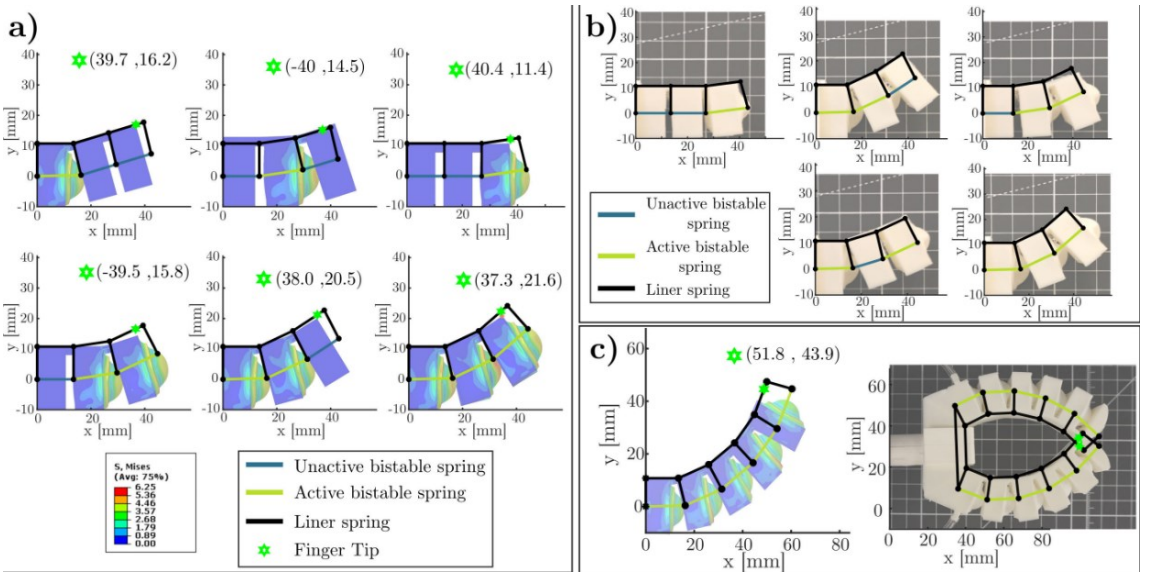

Figure 6. Comparison between predictions of the model and the results of FE simulations [15].

The result of the test has validated the accuracy of the prediction of this model (Fig. 6a and Fig. 6b). Additionally, three DPG model required 20 to 80 minutes to design and simulated by FE simulation (Fig. 6b), but it only takes 30 second to the same job if the multistable model is applied. That means the model can save up to 1/160 time comparing to traditional FE simulation when designing a proper gripper. The error rate is under 15% in the situation of testing three-dome gripper. Same experiment is implemented to five-dome gripper and the result turns out to be that it takes about 0.85 minute to design and predict the gripper and the error rate is around 12% (Fig. 6c). The exciting result and show the high-efficiency and precision of the model under the condition of no feedback during the whole function process.

4. Conclusions

This article introduces a model that can design a kind of soft multistable grippers under the condition of open loop control. The model is based on energy, which can be illustrated and plotted. The force of grasping can be adjusted and set accurately without any feedback parameters during the whole functioning process with the help of certain FE simulations and topology designing. The model consists of two soft fingers and each finger is made up of several lattices with domes and different kind of springs in them. The action of gripping is navigated by air. Many kinematical configurations have been tested and the error rate is decently low, which is around 15%. This model can provide people with a new idea and inspiration of the designing of multisatble soft gripper for soft robots. It can also be applied to some engineering application scenarios.

References

[1] Tirado J, Jørgensen J and Rafsanjani A 2023 Earthworm-inspired multimodal soft actuators *Conf. on Soft Robotics* pp 1-6

[2] Huang X, Kumar K, Ye Z and Majidi C 2019 Soft electrically actuated quadruped (SEAQ)—integrating a flex circuit board and elastomeric limbs for versatile mobility *IEEE Robotics and Automation Letters* **4(3)** pp 2415-22

[3] Li Q, Chen T, Chen Y and Wang Z 2023 An underwater bionic crab soft robot with multidirectional controllable motion ability *Ocean Engineering* **278** p 114412

[4] Eslami M, Pirmoradian M, Mokhtarian P and Baghaei S 2023 Design and manufacture of a soft robot with dual-interaction in virtual reality *Heliyon* **9(9)** p e19997

DOI: 10.54254/2755-2721/45/20241454

[5] Yap H, Lim J, Goh J and Yeow C 2016 Design of a soft robotic glove for hand rehabilitation of stroke patients with clenched fist deformity using inflatable plastic actuators *Journal of Medical Devices* **10(4)** p 044504
[6] González J, Poza J, Robles J, Ponce H, Brieva J and Moya-Albor E 2023 Design of a soft gripper hand for a quadruped robot *2023 IEEE 15th Int. Symposium on Autonomous Decentralized System* pp 1-6
[7] Sanjay Krishna J and Lal Priya P S 2023 Design of a versatile soft pneumatic gripper *2023 Int. Conf. on Control, Communication and Computing* pp 1-6
[8] Choi H and Koç M 2006 Design and feasibility tests of a flexible gripper based on inflatable rubber pockets *International Journal of Machine Tools and Manufacture* **46(12-13)** pp 1350-61
[9] Pettersson A, Davis S, Gray J O, Dodd T J and Ohlsson T 2010 Design of a magnetorheological robot gripper for handling of delicate food products with varying shapes *Journal of Food Engineering* **98(3)** pp 332-8
[10] Shintake J, Cacucciolo V, Floreano D and Shea H 2018 Soft robotic grippers *Advanced materials* **30(29)** p 1707035
[11] Cunha M, Foelen Y, Raak R, Murphy J, Engels T, Debije M and Schenning A 2019 An untethered magnetic- and light-responsive rotary gripper: shedding light on photoresponsive liquid crystal actuators *Advanced Optical Materials* **7(7)** p 1801643
[12] Zhong G, Dou W, Zhang X and Yi H 2021 Bending analysis and contact force modeling of soft pneumatic actuators with pleated structures *International Journal of Mechanical Sciences* **193** p 106150
[13] Wang X, Kang H, Zhou H, Au W, Wang M and Chen C 2023 Development and evaluation of a robust soft robotic gripper for apple harvesting *Computers and Electronics in Agriculture* **204** p 107552
[14] Xiao W, Liu C, Hu D, Yang G and Han X 2022 Soft robotic surface enhances the grasping adaptability and reliability of pneumatic grippers *Int. Journal of Mechanical Sciences* **219** p 107094
[15] Morgan H, Osorio J and Arrieta A 2023 Towards open loop control of soft multistable grippers from energy-based modeling 2023 *IEEE International Conference on Soft Robotics* pp 1-6
[16] Zhao J, Huang Y, Gao R, Chen G, Yang Y, Liu S, Fan K 2013 Novel universal multistable mechanism based on magnetic–mechanical–inertial coupling effects *IEEE Transactions on Industrial Electronics* **61(6)** pp 2714-23